PROCESS

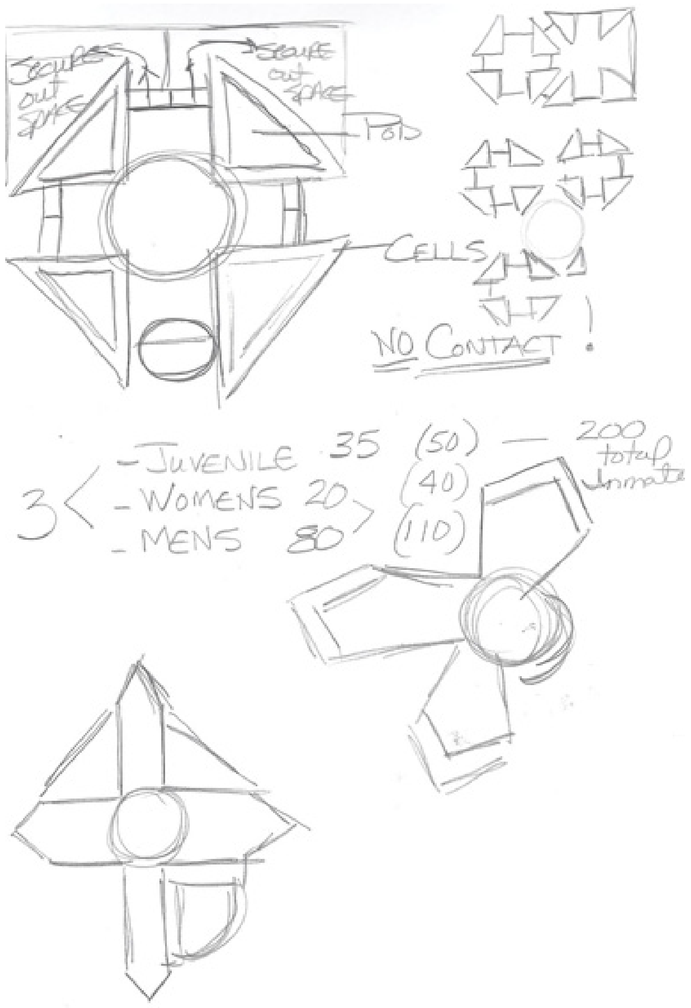
Secures out space
Secure out space
Pod
Cells
NO CONTACT !
3 < - JUVENILE 35 (50) — 200 total Inmate
- WOMENS 20 (40)
- MENS 80 (110)

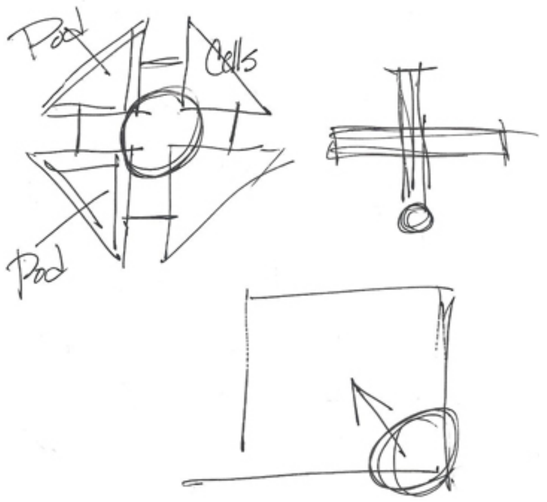
Pod
Cells
Pod

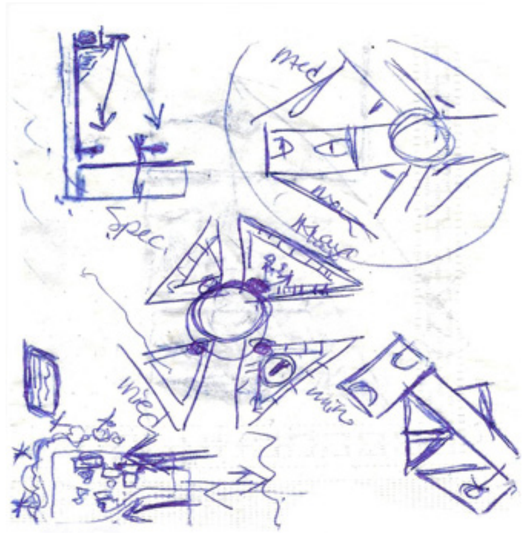
Med
Spec.
Med
Min

ND HIGHWAY PATROL
293

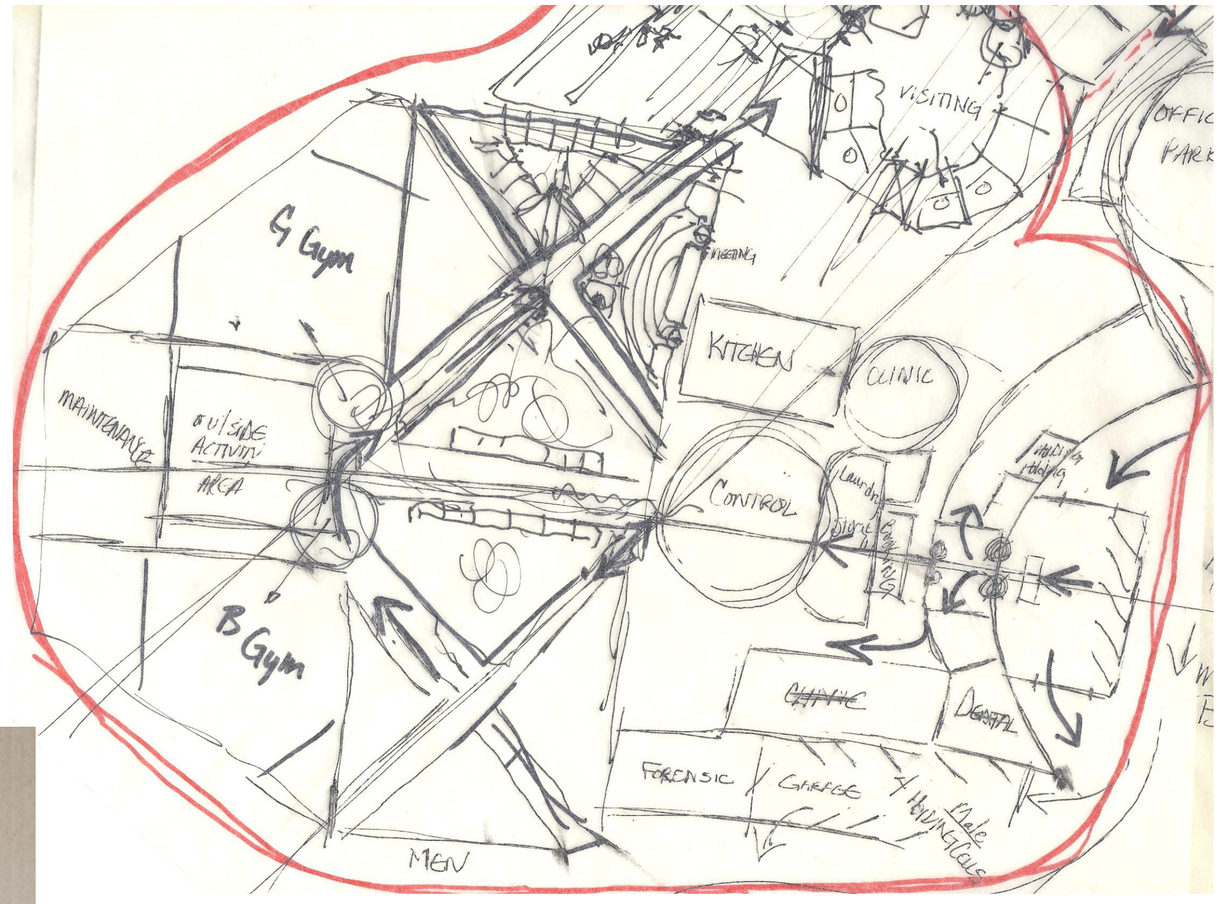
VISITING
G Gym
KITCHEN
CLINIC
MAINTENANCE
OUTSIDE ACTIVITY AREA
CONTROL
B Gym
DENTAL
FORENSIC
GARAGE
MEN

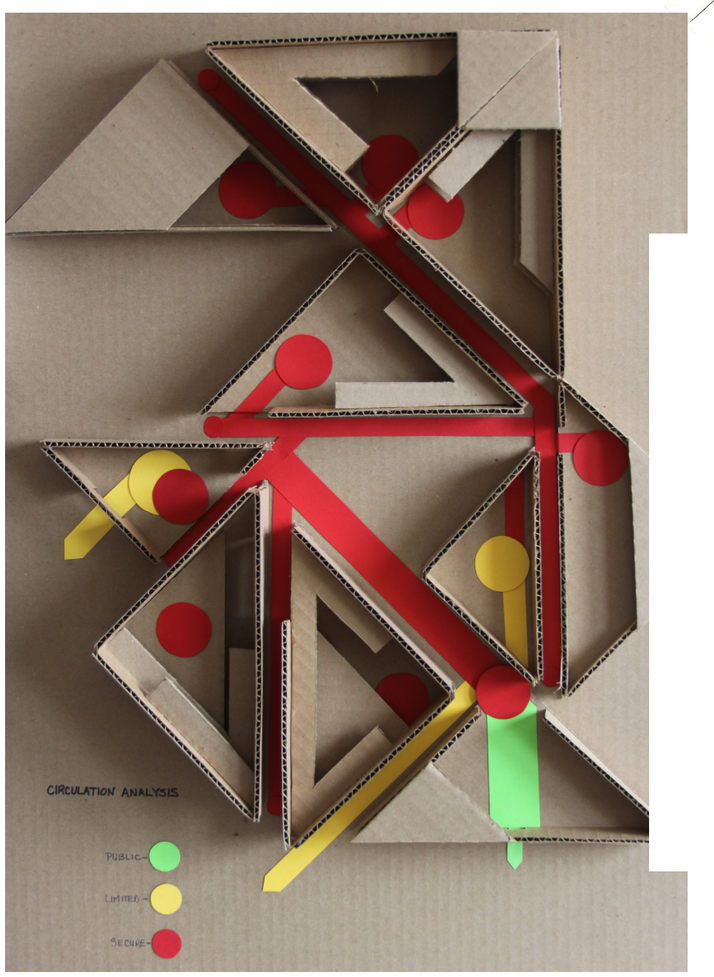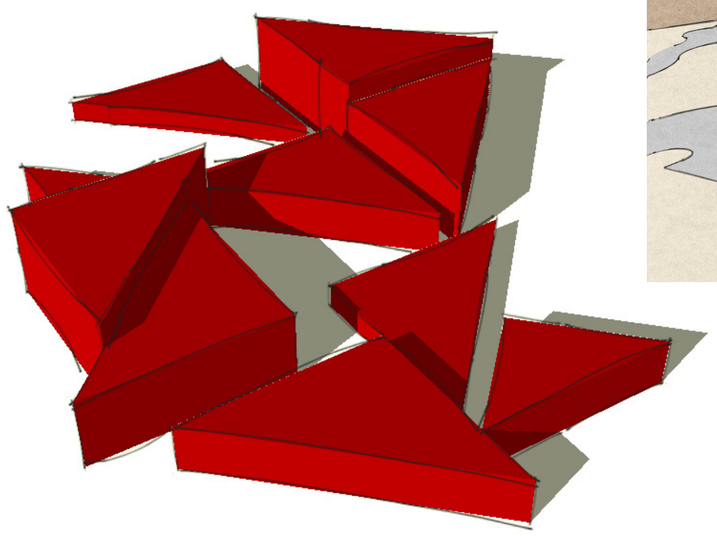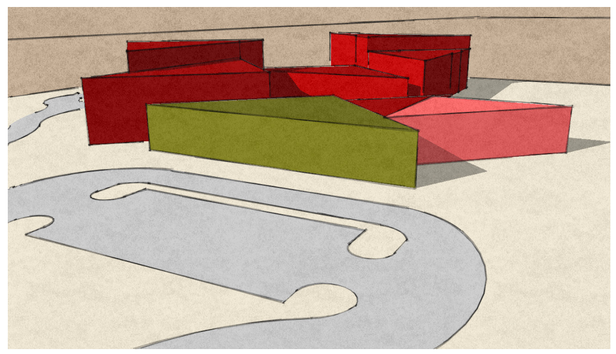
CIRCULATION ANALYSIS
PUBLIC
LIMITED
SECURE