"A PRECISION SLIP FREQUENCY DETECTOR"

Eivind Horvik

June 1957

A thesis submitted to the faculty of the North Dakota Agricultural College in partial fulfillment of the requirements for the degree; Master of Science.

The undersigned, appointed by the Dean of the Graduate Faculty, have examined a thesis entitled "A Precision Slip Frequency Detector" presented by Eivind Horvik, a candidate for the degree of Master of Science and hereby certify that in their opinion, it is worthy of acceptance.

TABLE OF CONTENTS

ACKNOWLEDGMENTS

The author wishes to express his sincere appreciation to the many persons assisting in this project. He is particularly indebted to his major advisor, Dr. Robert N. Faiman and to Associate Professor Edwin M. Anderson and Assistant Professor L. L. Melanson of the Electrical Engineering Department. Without their assistance and guidance this thesis would not have been possible.

And last, but not least, a sincere thanks to my wife, Inger, for her patience and understanding shown me while pursuing this degree.

LIST OF FIGURES

ABSTRACT

Horvik, Eivind. M.S. North Dakota Agricultural College, June 1957. A Precision Slip Frequency Detector, Major Professor: R. N. Faiman.

The problem of measuring low values of slip of induction machines is present in most Electrical Engineering laboratories. A rather high accuracy of the determination is necessary for theoretical calculations of motor loading, using equivalent circuit techniques. Conventional methods of determining slip fail to give high accuracy at low values of slip.

This thesis presents a solution to this problem by describing the design and construction of a precision slip frequency detector of nominal cost. The principle employed is that of beat frequency comparison of the rotor shaft speed against line frequency. The output of the beat frequency detector actuates a multivibrator-differentiating circuit, the output of which triggers an electro-mechanical counter. A photoelectric pickup device for determining shaft speed is also discussed.

CHAPTER I

INTRODUCTION TO THE PROBLEM

The problem of measuring low values of slip accurately in induction machines is one that is present in most Electrical Engineering laboratories. The equipment to be described in this thesis was designed for the specific purpose of measuring slip indirectly by measuring slip frequency. The importance of a precision determination of slip frequency will follow from a discussion of induction machines.

An induction motor may be represented by an equivalent circuit very similar to that used for a transformer. Use is made of the fact that a mechanical load on the motor is equivalent to a non-inductive resistive load in the circuit. Such a circuit is shown in Figure 1.

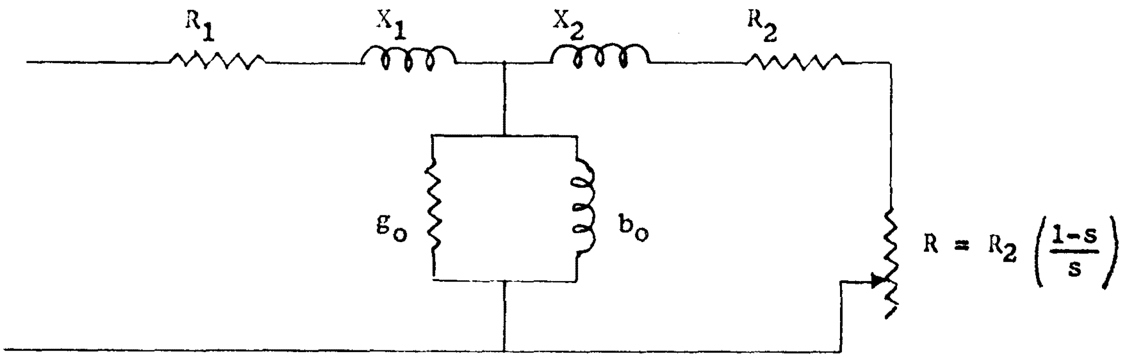

Figure 1. The theoretically exact equivalent circuit, representing one phase of an induction motor.

The secondary quantities are all referred to the primary. The applied voltage is V, the stator winding resistance and reactance are represented by R_1 and X_1, respectively. While g_o and b_o represent the exciting conductance and susceptance respectively, R_2 and X_2 are the equivalent resistance and inductance of the rotor circuit. The equivalent load resistance R is a function of the slip and is represented as a variable resistance. The gross power output per phase of the motor rotor may be represented

$$P_o = \frac{I_2^2 R}{746} = \text{horsepower developed} \tag{1}$$

The equation for the equivalent resistance due to the load is

$$R = R_2 \frac{1 - S}{S} \tag{2}$$

Where S denotes slip as defined below. If an induction motor is to develop any torque (by induction), a difference must exist between the speed of the rotating magnetic field, sometimes referred to as synchronous speed, and the actual speed of the machine. This speed difference is expressed as slip, where

$$S = \text{Slip} = \frac{\text{Synchronous speed} - \text{Machine speed}}{\text{Synchronous speed}} \times 100\% \tag{3}$$

The synchronous speed of any induction machine is readily found from the formula:

$$N_s = \frac{120\ f}{p} \quad \text{revolutions per minute (RPM)} \tag{4}$$

where f is the line frequency and p the number of poles of the machine.

However, since full-load slips are in the range of 3 to 4% or less, an accurate determination of machine speed is of utmost importance. Conventional methods for determining the speed of a machine make use of counters and stop watches, or watch and counter combined in one unit. These methods have two main drawbacks that will cause errors of speed determination. First, in all portable instruments the connection between the machine shaft and the counter is made through a spindle tipped with rubber and the possibility of slippage between the machine and the counter is a cause for error. Secondly, the precise gating of the time for which the counter is to be operated is nearly impossible to determine.

It is important to remember, however, that a very small error in speed determination will result in a large error in the slip value. As an example, take a case where the true speed of a 4-pole induction motor operating on 60 cycles per second alternating current is 1790 revolutions per minute. The true slip would then be:

$$S = \frac{1800 - 1790}{1800} \times 100 = .556\%$$

If the tachometer read 0.5% low, the speed would be read as 1781 RPM and the erroneous slip would be:

$$S = \frac{1800 - 1781}{1800} \times 100 = 1.056\%$$

Thus, in the example stated, an error of 0.5% in speed determination yields a slip error of 90%. Further thought shows that as the value of slip approaches zero, the error of apparent slip will approach infinity. Since the slip appears as the sole quantity in the denominator of equation (2), any error in the slip will result in an error in the calculation of the equivalent load resistance.

Better and more elaborate electronic devices for determining speed have been developed, but their high cost, together with the inherent slip error of this method as illustrated above, prohibits their use in most Electrical Engineering laboratories.

One of the most reliable methods for determining slip used today is based on a direct count of the number of revolutions of slip of a machine for a given time interval. This is achieved by flashing light at line frequency on marks on the rotating part of the machine, using the popular General Radio STROBOTAC or any other similar device. The main defect with such a method is human error. The operator could possibly put the wrong number of marks on the rotating part of the machine, he could miss a count or two, or he could introduce a large error in incorrect time-gating.

From the preceding discussion, it is apparent that there is a need for a simple, rugged, relatively low cost precision slip frequency detector. The author felt that it would be of great benefit if a device could be designed that would have a maximum slip error of about 3% within the practical limits of slip frequency for the majority of induction machines.

By using equation (4) equation (3) can be rewritten as follows:

$$S = \frac{\frac{120\ f}{p} - \frac{120\ f_m}{p}}{\frac{120\ f}{p}} \times 100 \qquad (5)$$

or

$$S = \frac{f - f_m}{f} \times 100 \qquad (6)$$

where f_m is the actual frequency of the machine.

Using equation (6) as a basis, a decision was made to design, build, and test a device that would give the complete numerator of equation (6) in cycles per second. Since the device was to be used with machines operating on 60 cycles per second power frequency, a frequency range downward to about 57 cycles per second (for induction motors under load) and upward to about 63 cycles per second (for induction motors prime moved at speeds higher than synchronous acting as generators) should cover all useful cases.

CHAPTER II

THEORY AND DESIGN OF A SLIP FREQUENCY DETECTOR

Theory. The basic problem examined in this thesis is the design and construction of an economical and portable device which will measure slip accurately. As shown in the previous chapter, the slip can be computed readily if the difference between the line frequency and the actual machine frequency is known. Thus, if a voltage of line frequency is added to a voltage with a frequency proportional to the motor speed, the resulting beat frequency voltage will indicate the slip frequency.

In order to analyze this phenomena of beats mathematically, consider two wave functions of equal amplitude A, but of different frequency:

$$y_1 = A \cos 2\pi f_1 t \quad \text{and} \quad y_2 = A \cos 2\pi f_2 t$$

where f_1 and f_2 denotes the individual frequencies of each wave motion.

By the principle of superposition, the resultant displacement is

$$y = y_1 + y_2 = A \left[\cos 2\pi f_1 t + \cos 2\pi f_2 t \right]$$

and since

$$\cos a + \cos b = 2 \cos \frac{a + b}{2} \cos \frac{a - b}{2}$$

this may be written

$$y = \left[2 A \cos 2\pi \frac{f_1 - f_2}{2} t \right] \cos 2\pi \frac{f_1 + f_2}{2} t$$

The resulting equation indicates that there is a frequency $\frac{f_1 + f_2}{2}$ (the average of the two original frequencies,) which has an amplitude given by the quantity in the brackets. This amplitude varies with time at a frequency $\frac{f_1 - f_2}{2}$.

A beat, or a maximum of amplitude, will occur when $\cos 2\pi \frac{f_1 - f_2}{2} t$ equals 1 or -1. Since each of these values occurs once each cycle, the number of beats per second is twice the frequency $\frac{f_1 - f_2}{2}$. Thus, the number of beats per second equals the difference of the frequencies. A graphical example of this is shown in Figure 2.

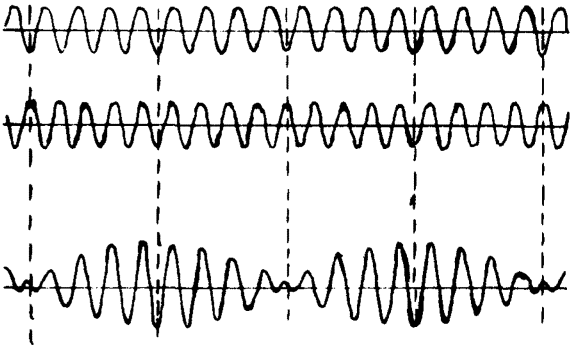

Figure 2. Beats Produced by Two Waves of Slightly Different Frequency.

This phenomena of beat frequency, which is also used in superheterodyne radio receivers, was used as the basis for the design of the slip frequency detector described. Of the two frequencies to be mixed, only the power frequency can be expected to be sinusoidal in form. However, a graphical analysis indicates the summing of waves of odd shapes, such as square or triangular waves or any variety in between, will still yield a definite beat frequency equal to the difference between the frequencies of the two waves being mixed.

Since the slip frequency is generally of a rather low value, the only practical way to detect it is to count the beats for a fixed length of time. This conclusion was arrived at after an attempt was made at detecting instantaneous slip frequency by matching it with a known low-frequency source on an oscilloscope.

Using this basic theory, the problem becomes one of designing and constructing an apparatus which will obtain a frequency signal from an induction machine, mixing this with a signal of line frequency and operating a gated counter at the beat frequency. The order of the development to be presented in this chapter follows that taken by the author in the design of the Slip Frequency Detector. Since difficulty was anticipated in the mixer, the work was initiated here by introducing a pseudo machine frequency from a conventional signal generator. The beat signal was followed through to the counter, and then the problem of finding a pickup probe was solved. The block diagram in Figure 3 shows the main parts of the device that were found necessary for satisfactory operation.

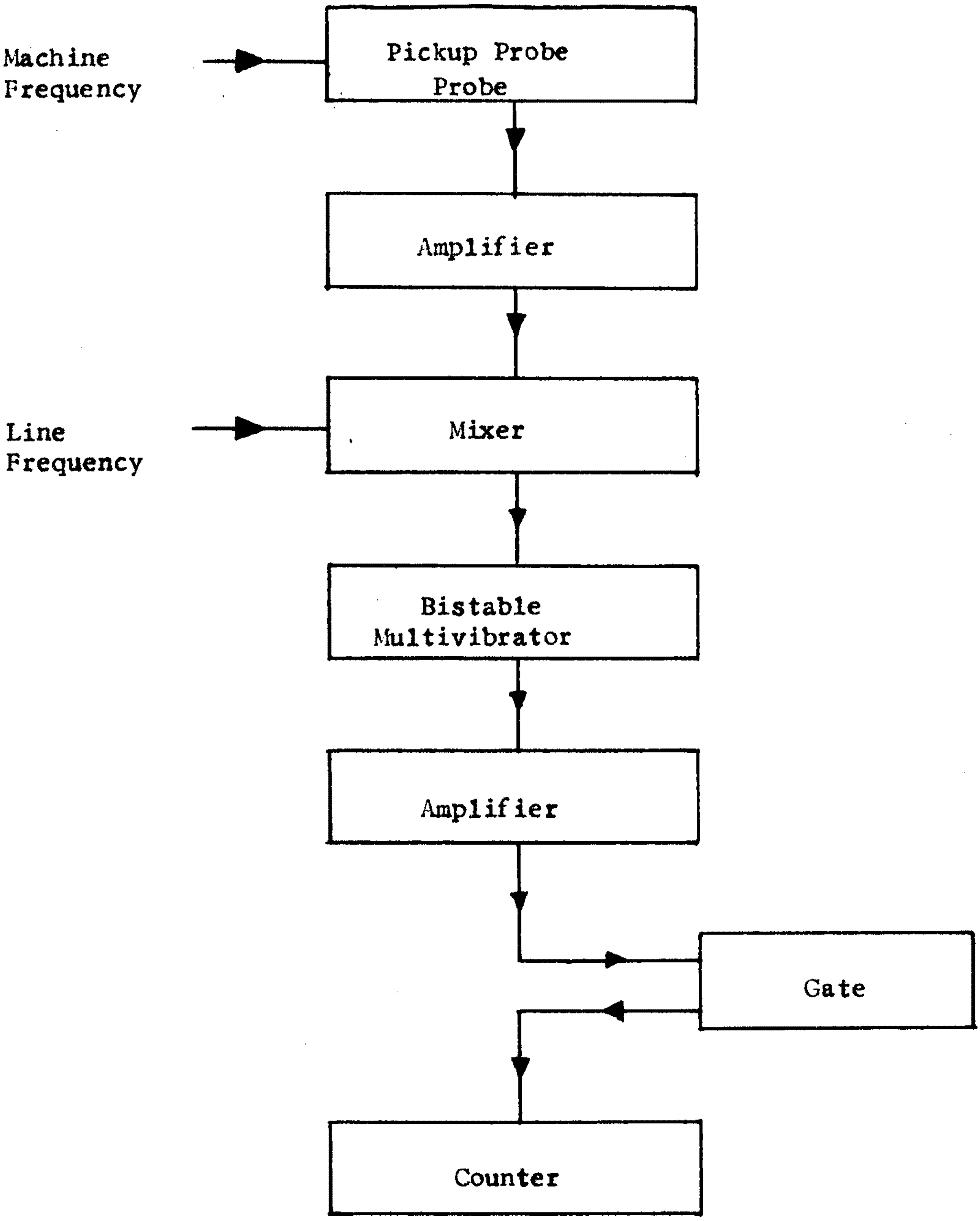

Figure 3. Block diagram of Slip Frequency Detector.

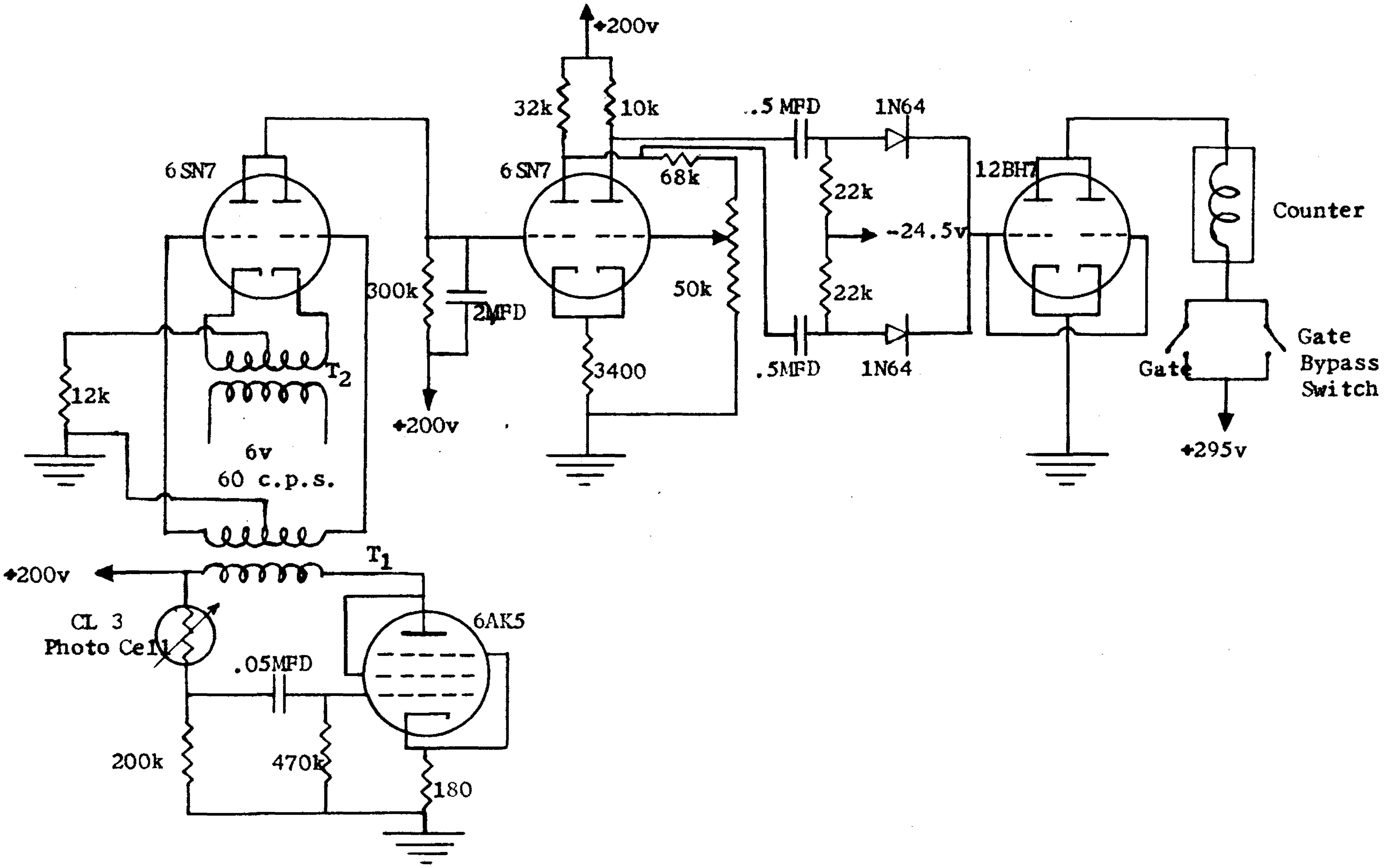

Figure 4. Circuit Diagram of the Slip Frequency Detector.

The Mixer. In the communications field, beat frequency oscillators are used when a readily regulated output frequency ranging from a few cycles per second up through the audio range, or even the video range, is desired. The problem of this design, however, was rather unique since the frequencies causing the beats would range only near 60 cycles per second. The circuit chosen was the common balanced modulator, operated with a grounded grid. A 6SN7 tube was operated in its non-linear region, and the output was obtained across a load resistor common to both plate circuits, as shown in the circuit diagram of Figure 4. The output voltage of a balanced modulator is indicated in Figures 5 and 6. As shown, the introduction of a capacitor will yield an output approximating the envelope of the output with no capacitor.

The Bistable Multivibrator. The function of this element and its associated circuitry is to convert a beat frequency voltage which has a form somewhat like Figure 6, into narrow pulses. A conventional Flip-Flop circuit was employed to obtain sudden changes in the plate voltage of a 6SN7 tube. The features of such a circuit is illustrated by the somewhat idealized graphs of Figure 7 (a) and (b). It is stable with either tube conducting, until a signal is applied to grid No. 1. When the bias is changed on the half that is conducting, the other half begins to conduct immediately. A differentiating network was employed to convert these wide pulses into narrow ones. It features diode detectors to eliminate the negative output, and the expected result is indicated in Figure 7 (c).

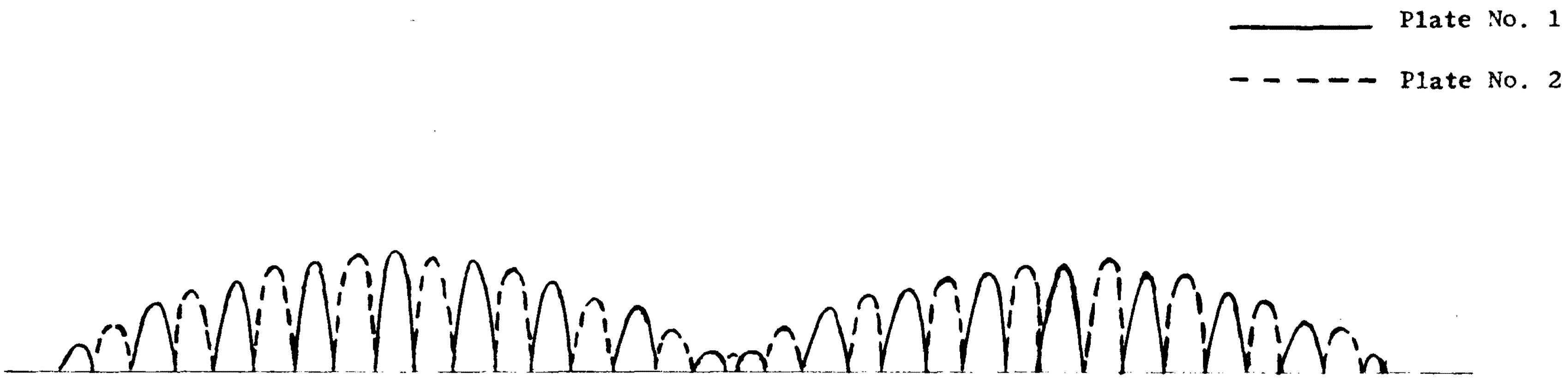

Figure 5. Output Voltage of a Balanced Modulator without Load Capacitor.

Figure 6. Output Voltage of a Balanced Modulator with Load Capacitor.

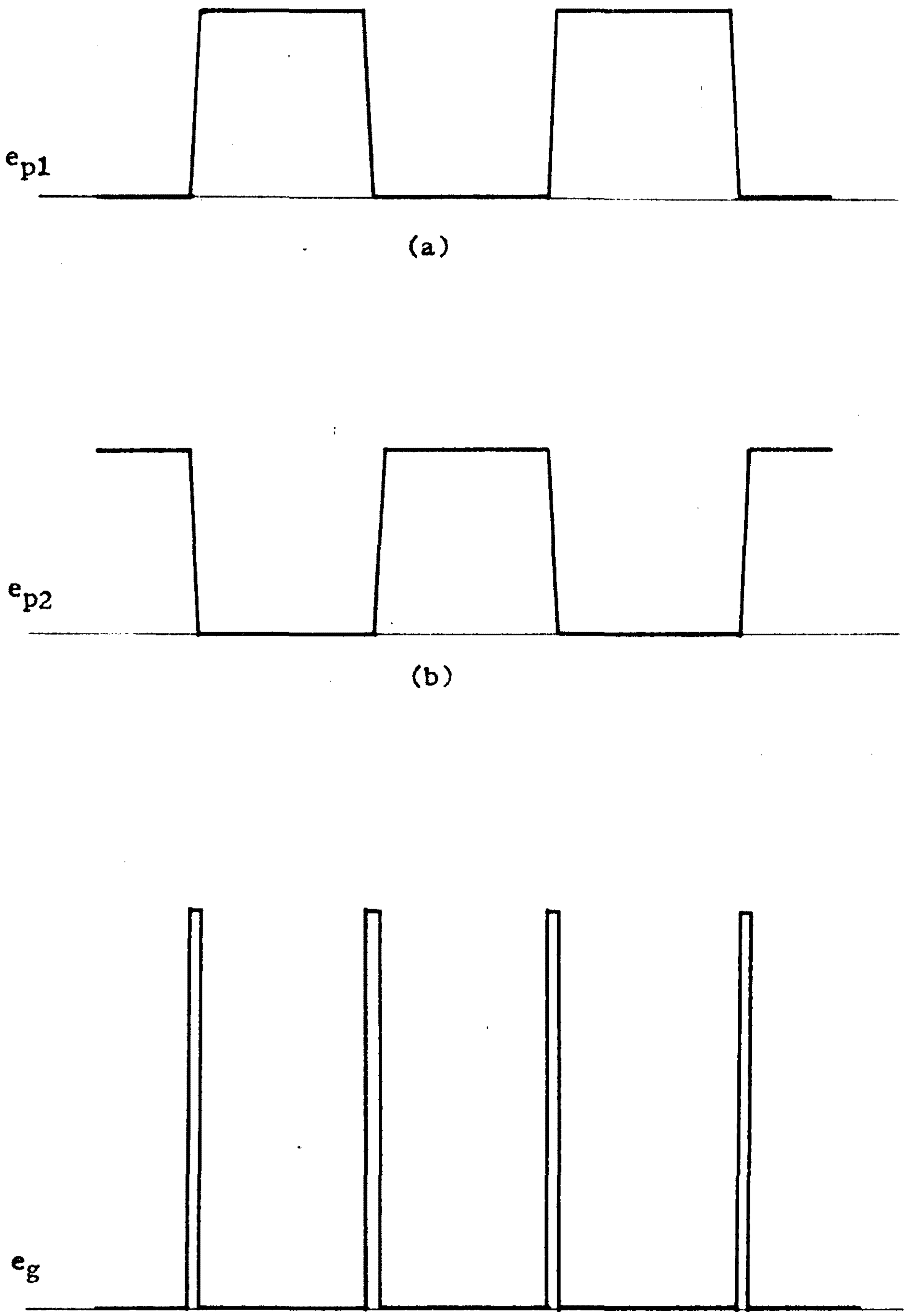

(a)

(b)

(c)

Figure 7. Ideal Graph of Plate Voltages of Bistable Multivibrator and Grid Input Signal to Counter Amplifier.

The Counter. A Mercury electric counter, Model MDB-S4, panel mounted, manually reset, was selected. This relay type counter was found to require a current of at least 60 milliamperes in order to close, and the current had to be brought down to at least 7.5 milliamperes in order for it to open again. A 12BH7 tube, with the triodes connected in parallel, will handle this current if operated directly from at least 200 volts supply voltage, with the counter the only load in its plate circuit. A blocking oscillator circuit was originally considered for peaking the current pulses through the counter, but since none of the transformers available were found to have suitable characteristics, this idea was abandoned. By proper selection of the preceding circuitry, the pulses entering the 12BH7 were shaped so that a conventional amplifier circuit could be used to operate the counter.

The Gate. The purpose of the gate, shown in the block diagram of Figure 3, is to limit the operation of the counter to a fixed time interval. Initially, conventional R C timing circuits using thyratrons, were considered for this apparatus, but since the timing cycle was to be rather long it was believed accuracy would be effected appreciably by the ambient temperature conditions of the components. An electromechanical counter powered by a synchronous motor was therefore selected. The gated time interval was chosen to be 50 seconds for two reasons. First, the counter available had a cycle of 60 seconds, and part of this time was to be used for stopping and starting so the clock motor could reach constant speed before starting its gating action. Secondly, since the pulse frequency from the differentiating network was twice that of the beat frequency, two counts would be registered for every cycle of slip frequency, thus giving the equivalent of 100 seconds gating. By proper selection of the decimal point, the slip frequency is thus obtained directly from the reading on the counter at the end of the gating cycle.

The Machine Frequency Pickup. As indicated in the block diagram of Figure 3, an electrical signal of machine frequency was desired as one of the inputs to the mixer. In general, transducers which produce a generated voltage can be divided into five groups: 1) magnetoelectric, 2) photoelectric, 3) piezoelectric, 4) thermoelectric, and 5) electrochemical. Since, in this case, the function of the transducer was to translate a mechanical motion (or signal) into an electric signal in the neighborhood of 60 cps., the three last groups were ruled impractical. The variety of devices available in the first two groups were narrowed down with the following specifications set by the author:

A. Output frequency identical to machine shaft frequency.

B. Portable.

C. No critical adjustments required.

None of the magnetic transducers considered met all three of the above conditions. For instance, an a.c. generator type would likely not give the exact machine frequency if it was to be portable, due to possibility of slippage in a friction type coupling. A variable reluctance path type, like those used in tape recorders, would give the exact frequency but if it was to be made portable, it would require a very critical adjustment of the air gap. This type was tested, but due to the above mentioned weakness, it was not used. Finally, the photoelectric group was investigated. The author had been reluctant to consider this type of transducer since it would require an amplifier to bring the signal up to proper level before being fed into the mixer, but a closer study indicated that a photoelectric pickup would be the best choice. The type finally decided upon for machine frequency pickup was a variable parameter, transistor type, CL-3 photo cell. Since all machinery couplings and shafts in the Electrical Engineering laboratories at this school are red, the CL-3 with its high sensitivity to red was chosen. Strips of the black #33 Scotch electrical tape applied to the shafts or couplings would then yield the needed signal. In order to have a reliable signal that would be independent of the ambient light conditions, the pickup device was provided with its own light source. Since the photo cell was very small in size (1/4 in. diameter, 1/2 in. length) it was mounted inside a probe with the light source. Figure 8 shows the light bulb-photo cell unit removed from the probe body. The lens, shown mounted on the left end of the probe, serves a double purpose. Besides helping to converge slightly the light rays leaving the probe, it converges the rays reflected from the shaft of the induction machine approaching the photo cell. It is apparent that since the photo cell was to primarily receive reflected light from the machine, the inner wall of the probe had to be painted black and the light source mounted behind the photo cell, as shown in Figure 8. As a result, the following relationship must exist between the distances involved:

distance to photo cell $<$ focal distance $<$ distance to bulb.

The relative distance between the above mentioned components and the lens is shown in Figure 8. The probe was attached to a flexible support arm consisting of a single 6 A.W.G. copper wire, half of which was taped to a rod mounted on a sturdy base. The copper wire gave the proper flexibility so the probe can be readily positioned to pick up signals from the shaft of any of the machines in the Electrical Engineering laboratory. An example of this in use is shown in Figure 9.

A conventional transformer-coupled amplifier, using a 6AK5 tube connected as a triode, was used to boost the signal strength fed to the mixer.

The Power Supply. The main power supply for this apparatus is shown in Figure 10. The 6X5 tube gives full-wave rectification and since the current drain was low in the tubes where the supply voltage was required to be ripple free, RC filtering was used. A potential divider was used in order to obtain the 200 volts needed for the major portion of the circuit, since no power transformer with lower high voltage winding was available locally.

The counter tube was to draw a relatively large current intermittently, therefore, the actual output voltage of the rectifier tube was used for plate supply. This necessitated a rather large bias supply for the 12BH7 tube, so it was near cutoff when no pulse was applied to its grid. Since only pulses would constitute the current in this tube, the ordinary cathode-resistor bias arrangement could not be used. In order to overcome this difficulty, a conventional voltage tripler circuit working off 6.3 volt alternating current was used, as shown in Figure 11.

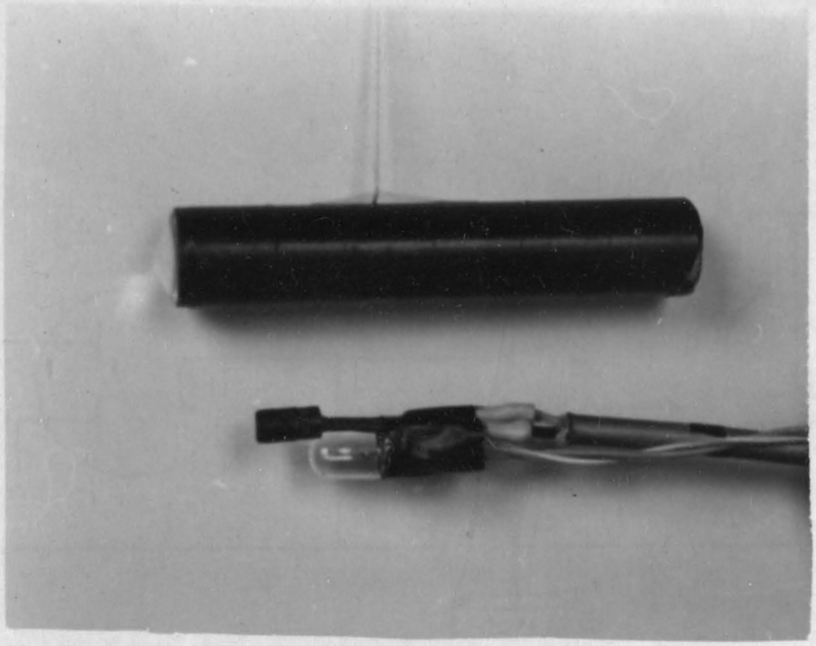

Figure 8. Photo Cell and Illuminator Removed from Probe Body.

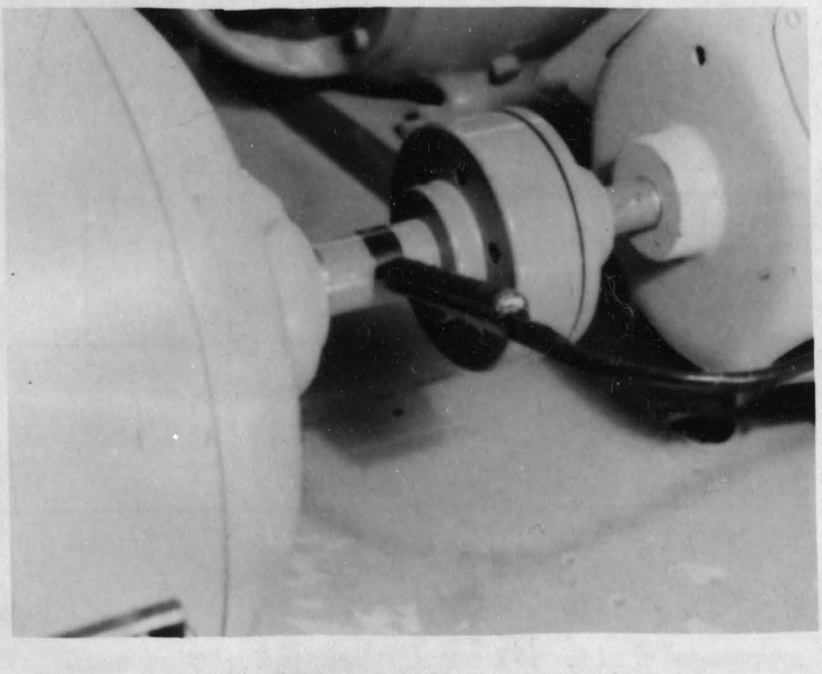

Figure 9. The Pickup Probe on Location in the Laboratory.

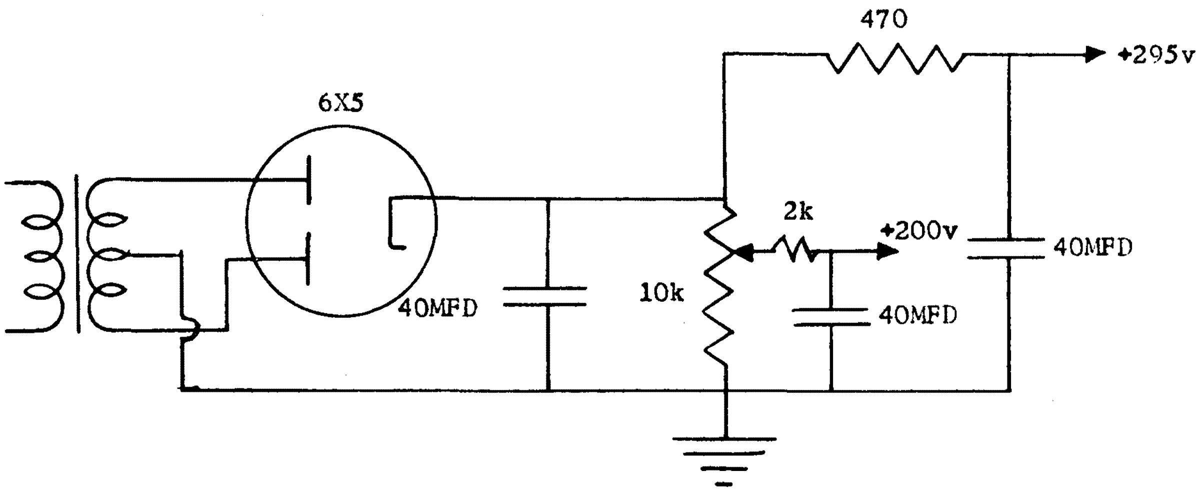

Figure 10. Power supply for Slip Frequency Detector.

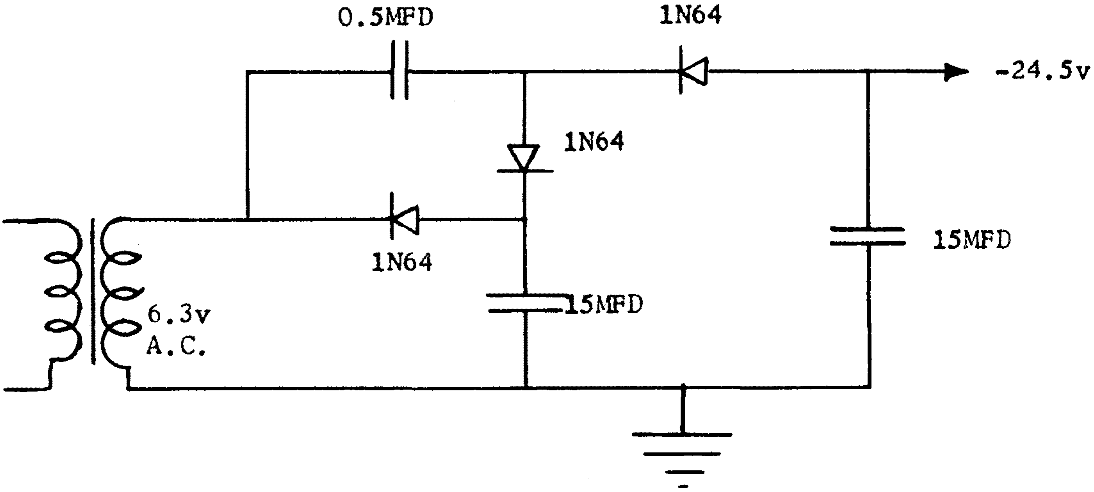

Figure 11. Bias supply for 12BH7 tube for Slip Frequency Detector.

Figure 12. Rear View of Completed Chassis.

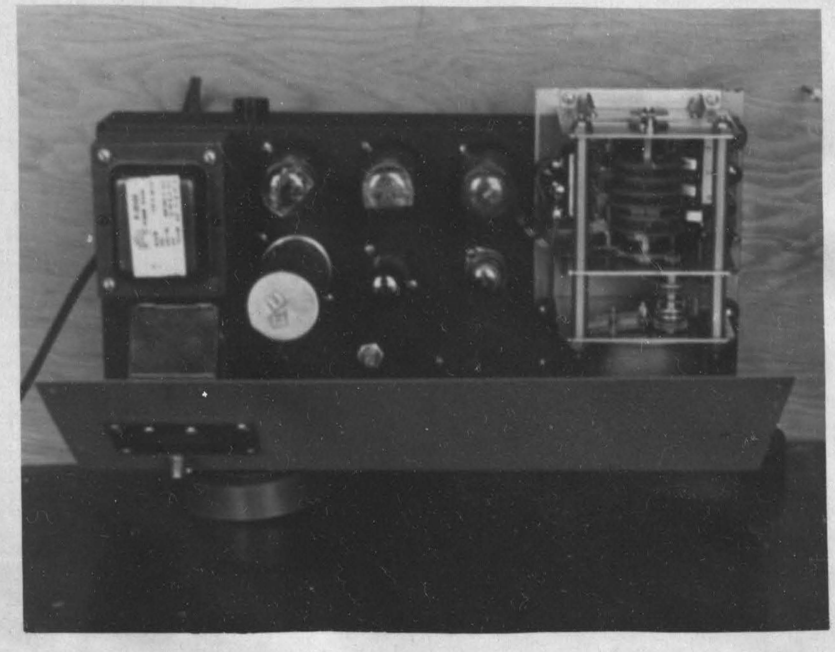

Figure 13. Top View of Completed Chassis,
Showing Location of Major Components.

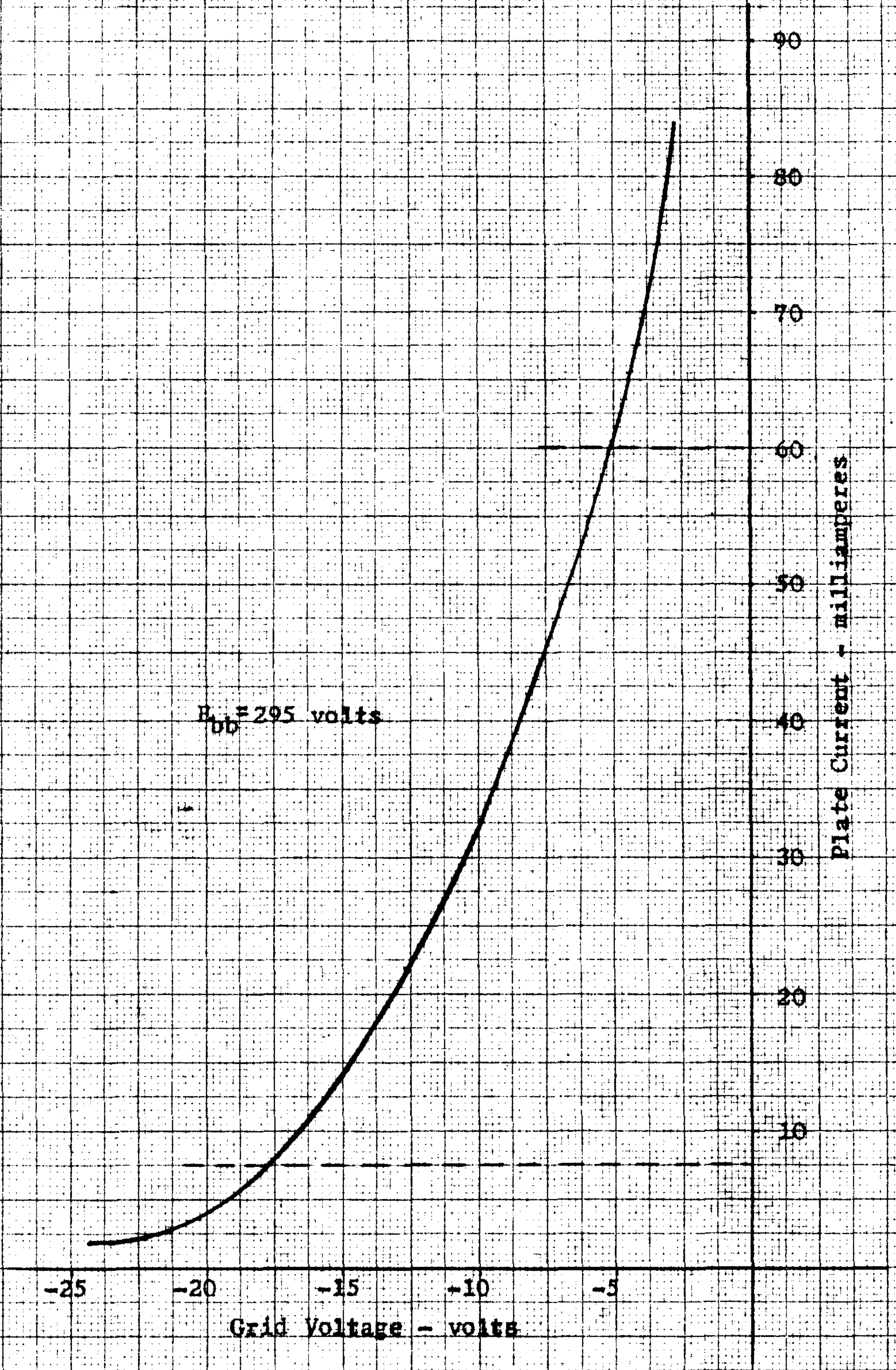

Figure 14. Transfer Characteristics for 12BH7 with Triodes in Parallel.

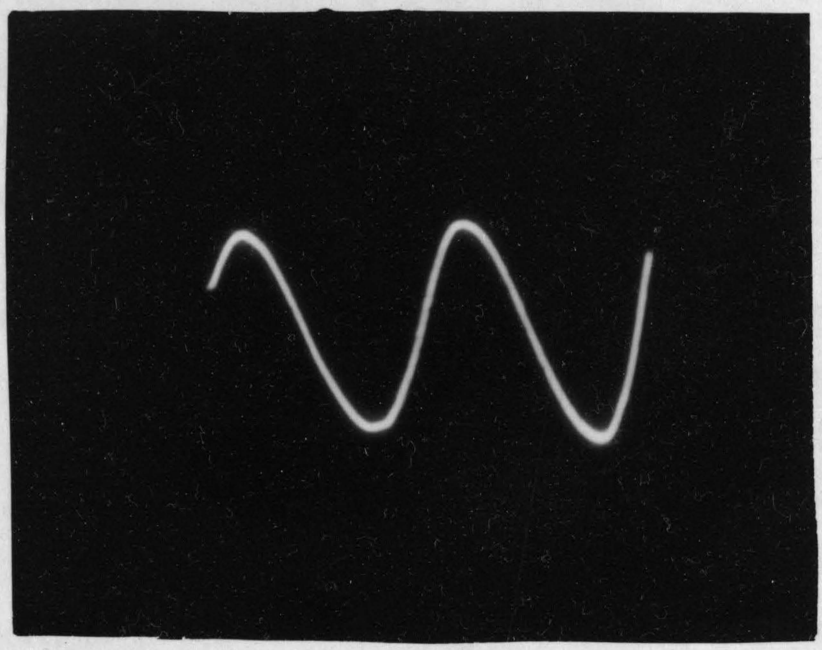

Figure 15. Voltage-Time Diagram of Input to 6AK5 Tube .

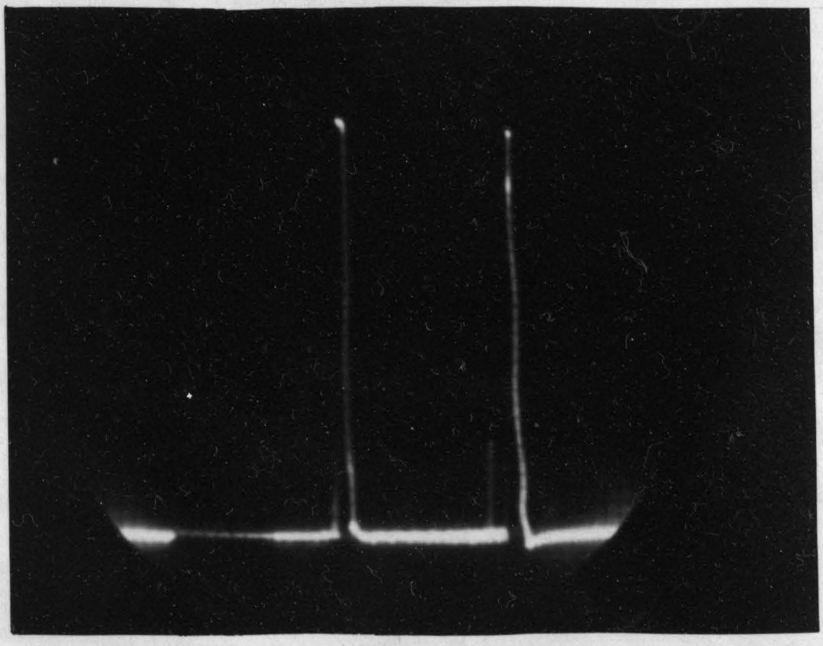

Figure 16. Voltage-Time Diagram of Grid Voltage of 12BH7 Tube.

CHAPTER III

CALIBRATION AND EVALUATION OF THE INSTRUMENT

Calibration. Initial calibration of the 50 second timing cycle of the gating circuit was accomplished by attaching a sheet of polar graph paper to the 1 revolution per minute shaft, as shown in Figure 17. The graph paper was marked ON 300 degrees ahead of the OFF mark, and the adjustable cams were set to complete a test light circuit when the ON-mark matched a stationary mark, and the circuit disconnected when the OFF-mark matched this same stationary mark. For final calibration, the gate was used to control the number of pulses fed into a scaling unit. A General Electric, Cat. SG 13 square wave generator synchronized to line frequency, was used to generate the pulses, and a Nuclear Model 165 scaling unit with the high voltage and the Geiger-Muller tube disconnected, was used to do the counting. The accuracy of the gate was very high, the error for ten successive runs being less than 0.02%.

The specifications for the counting relay used in the Slip Frequency Detector stated that the maximum counting rate was 10 counts per second. Since the maximum slip frequency to be measured with this instrument was 3 cycles per second, or 300 count per 50 second interval, the maximum counting rate would only be 6 cycles per second and would be well within the limits of the relay. Because a minimum closed period of 0.040 second was also specified for this relay, a photograph was taken of the actual pulse width of this instrument on an oscilloscope with a time base of 0.2 second. The result, which is indicated in Figure 18, shows the pulse width to be approximately 0.05 second. A minimum open

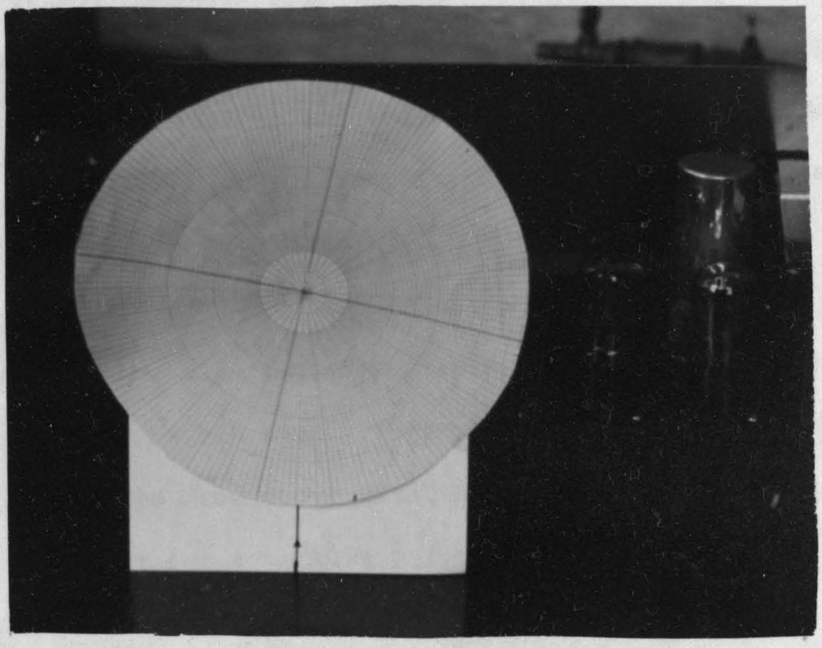

Figure 17. Arrangement for Initial Calibration of Gate.

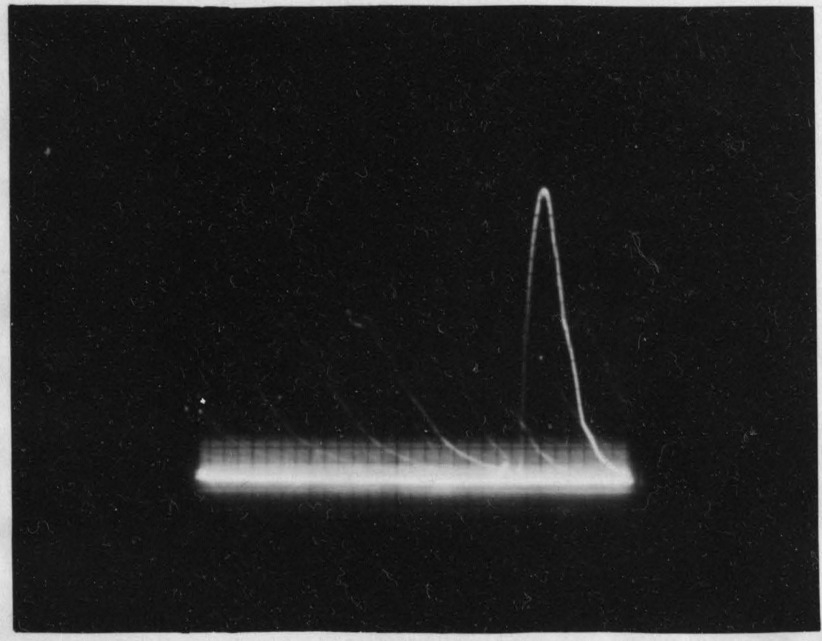

Figure 18. The Current Pulse Through the Counter.

period of 0.060 second was also required for satisfactory operation of the relay. Because this time interval was found to vary with probe adjustment and the amount of slip, a measure of this quantity would be meaningless and the final adjustment for proper open period was left to the operator for direct observation (as indicated further under Operation).

Aside from the probe location adjustment, the instrument requires only the one adjustment of varying the bias on grid No. 2 of the bistable multivibrator. This potential divider, located so it can be adjusted from above with the chassis removed from the cabinet, was set for even size pulses into the grid of the counter tube when measuring slip of 1.5 cycles per second. This potential divider, once set, will require readjustment only for installation of a new 6SN7.

Evaluation. The accuracy of an instrument of this type is affected by the following factors:

1) The relationship between the rate of pulses registered on the counter and the actual slip.
2) The accuracy of the gated current time interval.
3) Where the gating circuit time interval starts and stops with respect to the pulses obtained from the pickup.

These factors will be discussed individually for this particular instrument.

1). The rate of the pulse pairs registered on the counter was found to be exact. In order to prove this, a General Radio STROBOTAC operated on line frequency was used. With the 60 cycles per second light pulses from this device directed onto the shaft of the machine being tested, two counts were obtained on the counter every time one of the black tape strips on the shaft appeared to advance past a stationary mark. When checking the instrument within its range of ± 3 cycles per second, two operators were needed. One observer checked with a STROBOTAC, operated at line frequency, that for every apparent tape strip advance on the shaft, two counts were heard on the counter. The other observer watched the counter to check that every pulse heard was actually registered on the counter.

2). The accuracy of the gated time interval, when measured by the method described under Calibration was found to be very high; the error for ten successive runs being less than 0.02%.

3). The relationship between the pulses and the gate at the start and end of individual timing intervals will vary in a random manner.

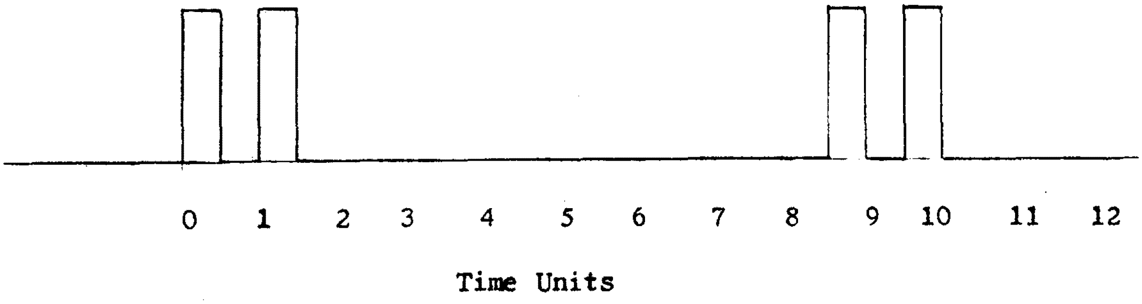

Figure 19. A Plot of Idealized Pulses with Respect to Time.

That this will introduce an error is apparent from a study of Figure 19. For a time interval of 10 time units, the count would be 4 if started at time 0, 3 if started at time 1, and 2 if started at time 2. Disregarding the width of the pulses and their spacing, the maximum error on any count due to this would be ± 2 counts. Using this hyopthetical case, the maximum % error for individual 50 second time intervals was calculated and plotted in Figure 20. If the gate can be considered error-free, the error of this instrument is then always less the value indicated in Figure 20.

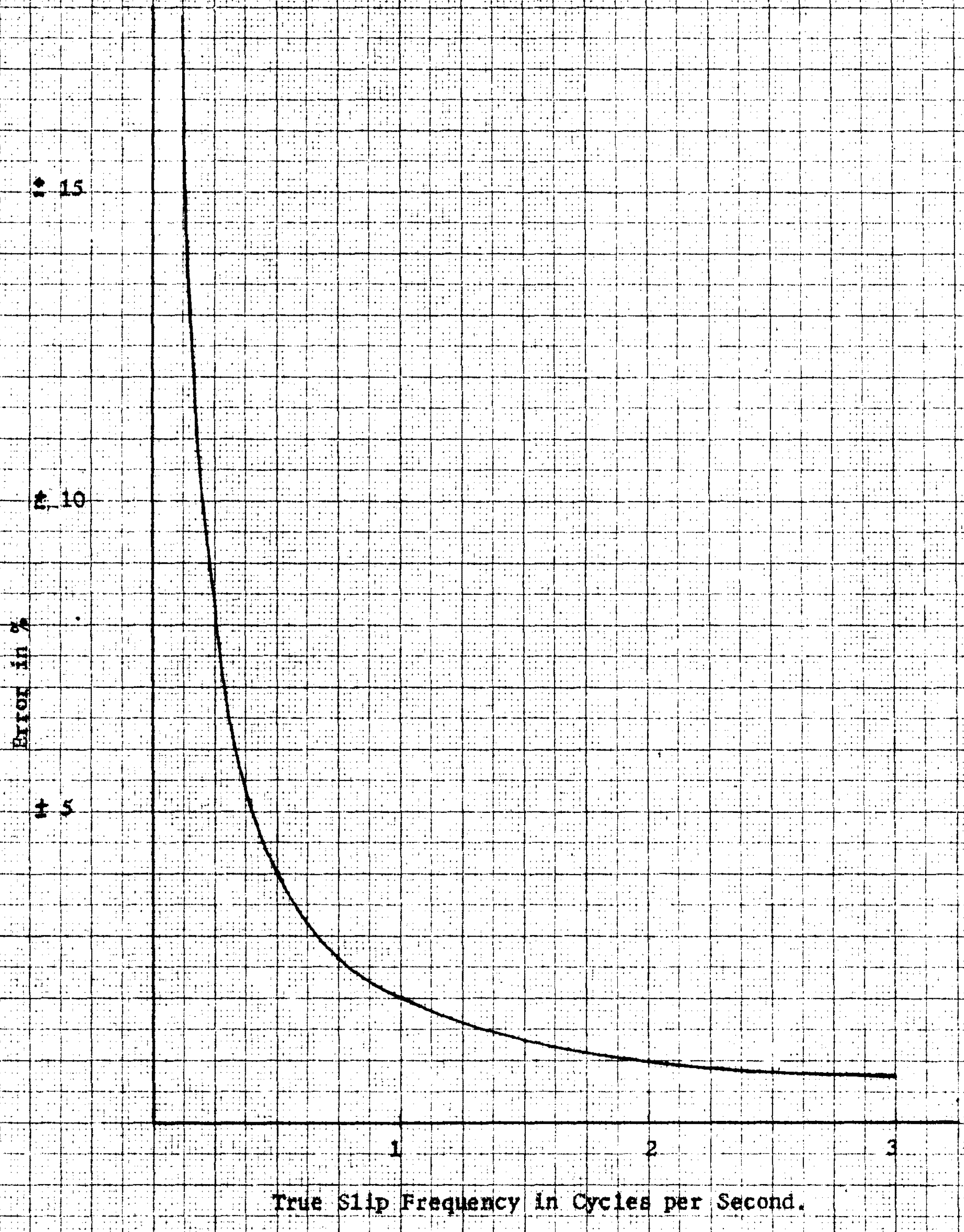

Figure 20. Maximum Error of Slip Frequency due to Relationship Between the Gating Circuit Time Interval and the Pulses Gated.

CHAPTER IV

INSTRUCTIONS FOR OPERATION

The instrument should be allowed to warm up for at least 5 minutes. Strips of #33 Scotch electric tape should be attached to the red shaft or coupling of the machine to be tested, as shown in Figure 9. These tape strips should cover about half of the circumference of the shaft or coupling, evenly spaced, one strip for every two poles. The pickup probe should be perpendicular to the shaft or coupling so that it transmits light to the portion where the tape has been applied and spaced about 1 inch from the shaft or coupling. After the instrument has warmed up, the gate bypass switch should be turned on and, if necessary, the pickup spacing adjusted with the machine rotating at the speed where the slip is to be determined. Since the counter used is easily heard, the operator should have no trouble adjusting the probe to obtain evenly spaced clicks.

When determination of slip frequency is desired, the gate bypass switch should be turned off, the counter reset and the start button pressed. After 5 seconds, the counter will start operating automatically and continue to do so for 50 seconds. Upon completion of the gating cycle, the slip frequency can be read directly from the counter, noting the decimal point.

CHAPTER V

CONCLUSIONS AND SUGGESTIONS FOR FURTHER INVESTIGATION

The purpose of this project was to design and construct an instrument which would detect slip frequency accurately within the range of ± 3 cycles per second. This was accomplished by designing and building a device which cost less than $50.00 for purchased parts. The adjustment of the transducer is not very critical and it is independent of ambient light conditions. The primary source of error introduced in the results is a random error which can be effectively eliminated by statistical processes if the operator can afford the time necessary to make a series of runs and then average these results. This error can also be minimized by manual timing i.e. using the gate bypass switch and an external timer with a period much longer than the 50 seconds of this instrument.

In order to improve the accuracy of this instrument, it is suggested that a study be made to see if the gating circuit can be triggered by one of the slip pulses so as to give the start of the gated time interval a definite relationship to the first pulse counted. Further, an attempt should be made to improve the spacing of adjacent pulses entering the counter. The possible effect on the present gate by different ambient temperatures could also be investigated.

Since the photoelectric pickup was found so effective in this instrument, it is suggested that future models should be considered without a separate mixer section. Using an illuminator that sends out light flashes at line frequency, like a STROBOTAC, indications of the beats could then be had directly and the resulting beat signal could be fed directly into the bistable multivibrator.

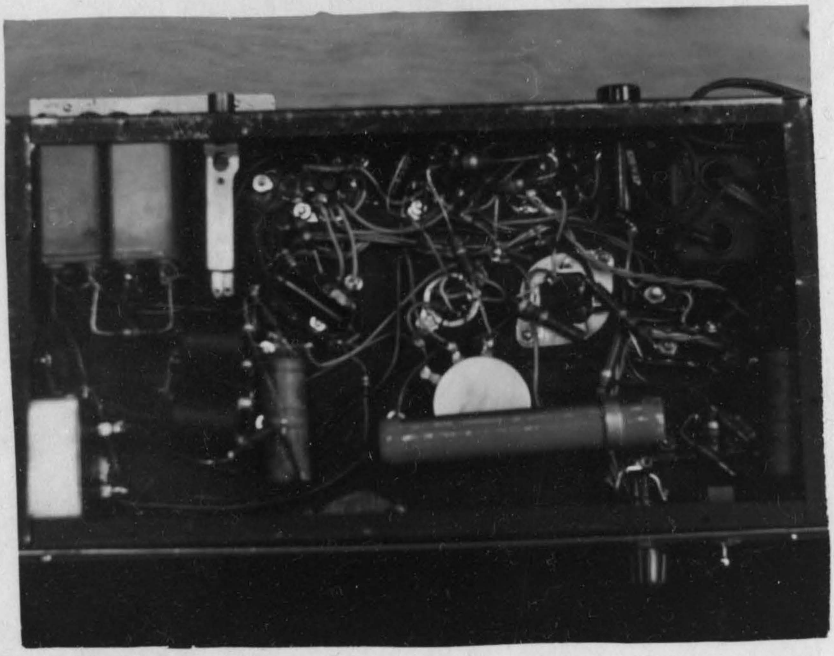

Figure 21. Bottom View of Chassis.

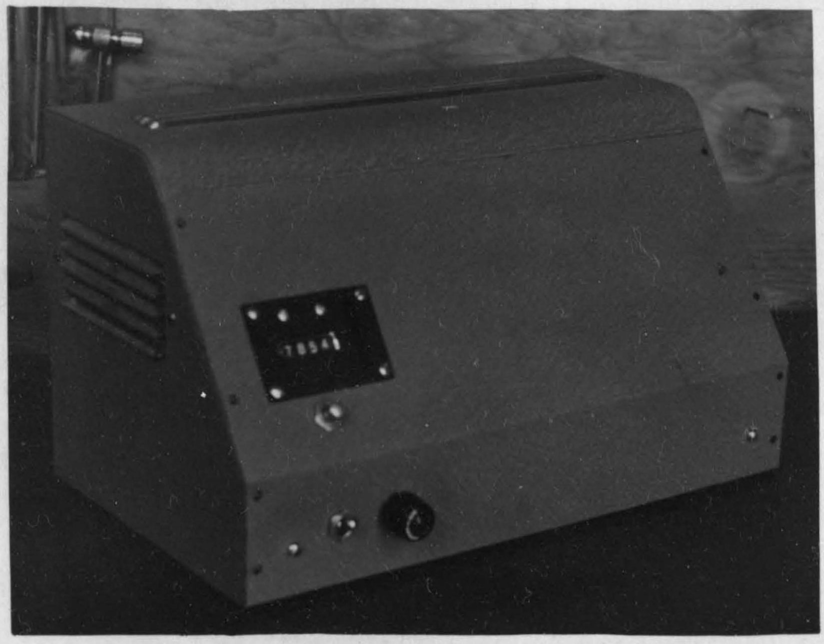

Figure 22. The Slip Frequency Detector Mounted in Cabinet.

BIBLIOGRAPHY

Arguimbau, L. B., Vacuum Tube Circuits and Transistors; New York, John Wiley & Sons, Inc., 1956.

Bendz, W. I., Electronics for Industry; New York, John Wiley & Sons, Inc., 1947.

Hill, W. R., Electronics in Engineering; New York, McGraw-Hill Book Company, Inc., 1949.

Keator, F. W., Mechanical Laboratory Methods, Fifth Edition; New York, D. Van Nordstrand Company, Inc.

McFarland, T. C., Alternating Current Machines; New York, D. Van Nordstrand Company, Inc., 1948.

Puchstein, A. F., and Lloyd, T. C., Alternating Current Machines; Second Edition, New York, John Wiley & Sons, Inc., 1949.

Ryder, J. D., Electronic Fundamentals and Applications; New York, Prentice-Hall, Inc., 1950.

Semat, Henry, Fundamentals of Physics; Third Edition, New York, Rinehart & Company, Inc., 1957.

Sylvania Electric, Sylvania Technical Tube Manual, Tenth Edition, Emporium, Pennsylvania; Sylvania Electric Products Inc. 1955.

Terman, Fredric Emmons, Radio Engineers Handbook, New York; McGraw-Hill Book Company, Inc., 1943.

BIBLIOGRAPHY

Arguimbau, L. B., *Vacuum Tube Circuits and Transistors*; New York, John Wiley & Sons, Inc., 1956.

Bendz, W. I., *Electronics for Industry*; New York, John Wiley & Sons, Inc., 1947.

Hill, W. R., *Electronics in Engineering*; New York, McGraw-Hill Book Company, Inc., 1949.

Keator, F. W., *Mechanical Laboratory Methods*, Fifth Edition; New York, D. Van Nordstrand Company, Inc.

McFarland, T. C., *Alternating Current Machines*; New York, D. Van Nordstrand Company, Inc., 1948.

Puchstein, A. F., and Lloyd, T. C., *Alternating Current Machines*; Second Edition, New York, John Wiley & Sons, Inc., 1949.

Ryder, J. D., *Electronic Fundamentals and Applications*; New York, Prentice-Hall, Inc., 1950.

Semat, Henry, *Fundamentals of Physics*; Third Edition, New York, Rinehart & Company, Inc., 1957.

Sylvania Electric, *Sylvania Technical Tube Manual*, Tenth Edition, Emporium, Pennsylvania; Sylvania Electric Products Inc. 1955.

Terman, Fredric Emmons, *Radio Engineers Handbook*, New York; McGraw-Hill Book Company, Inc., 1943.