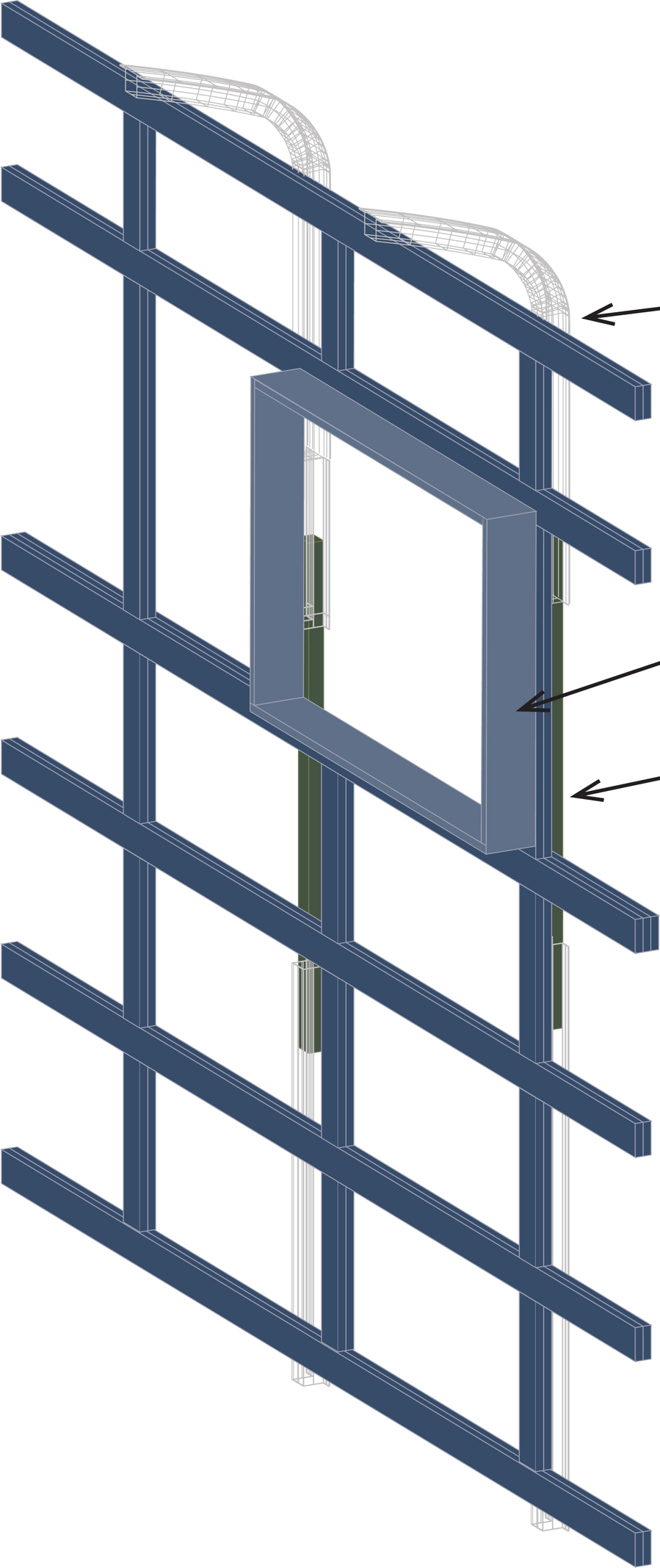

EXISTING HAT-CHANNEL

2 - 1/2” PLYWOOD STRIPS

WINDOW FRAMING

STL. TUBING FOR ROOF EXTENSION

3 - 1/2” PLYWOOD STRIPS

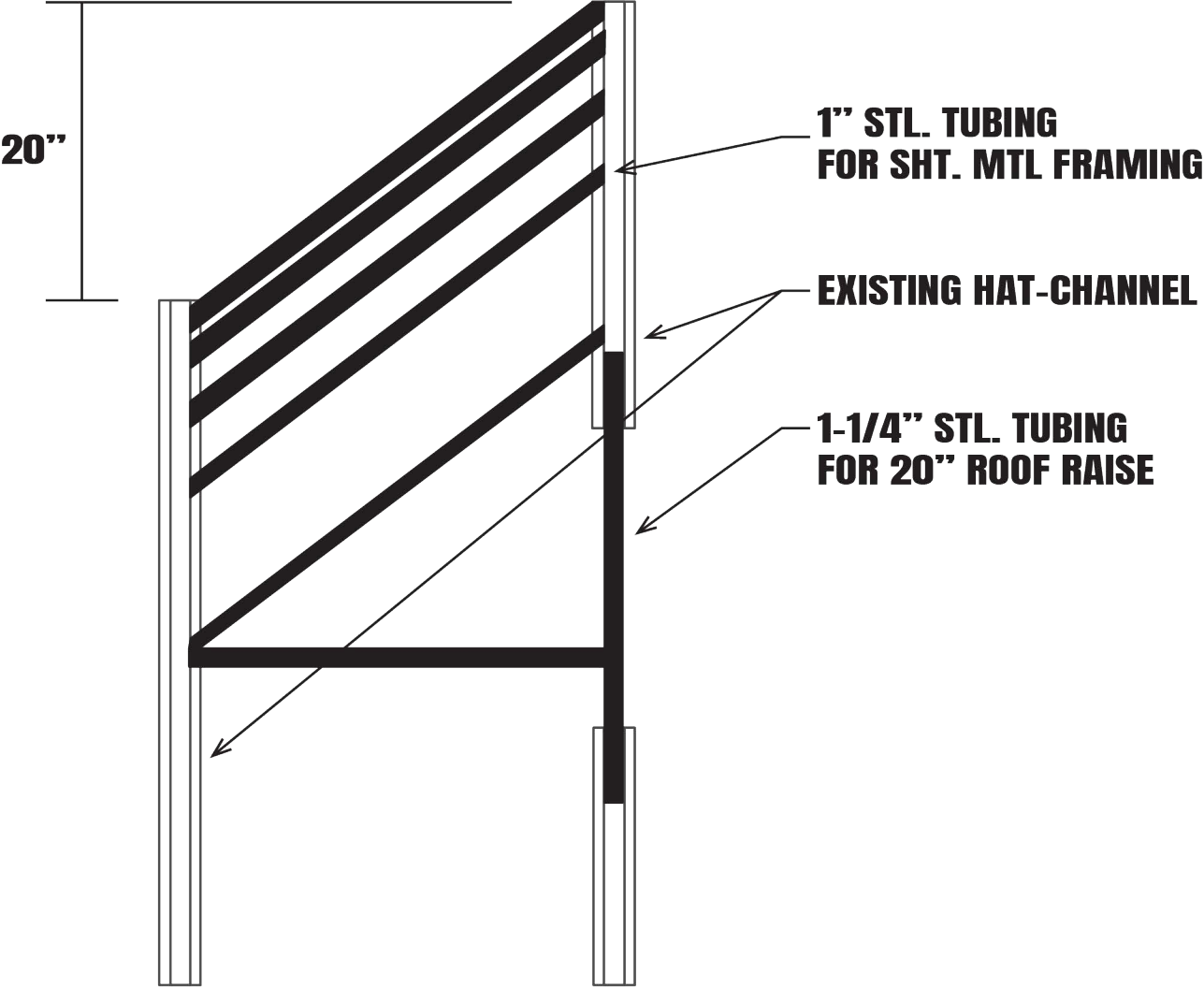

STL. FRAMING FOR
ROOF TRANSITION

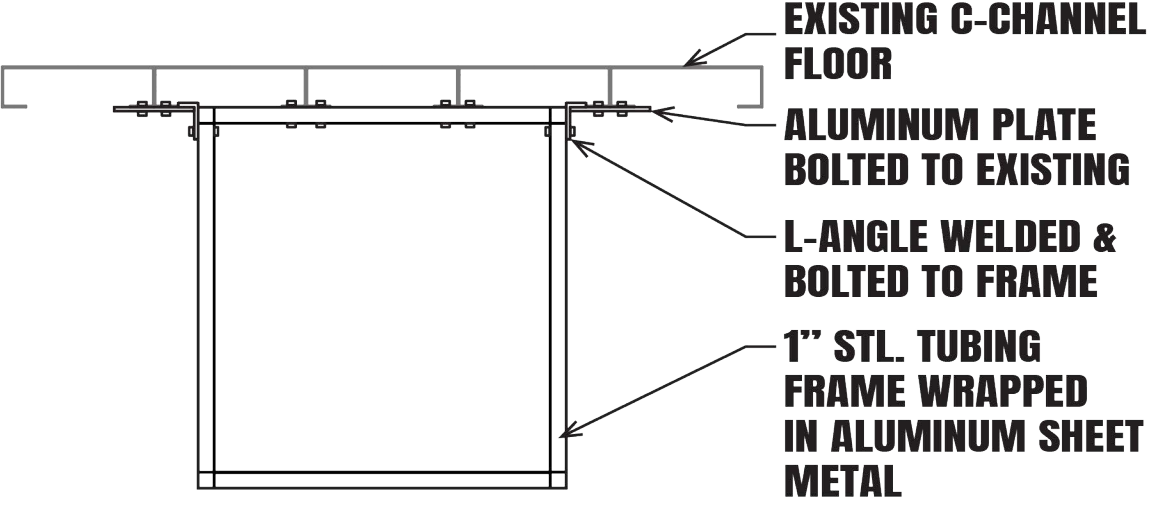
EXISTING C-CHANNEL FLOOR
ALUMINUM PLATE BOLTED TO EXISTING
L-ANGLE WELDED & BOLTED TO FRAME
1" STL. TUBING FRAME WRAPPED IN ALUMINUM SHEET METAL

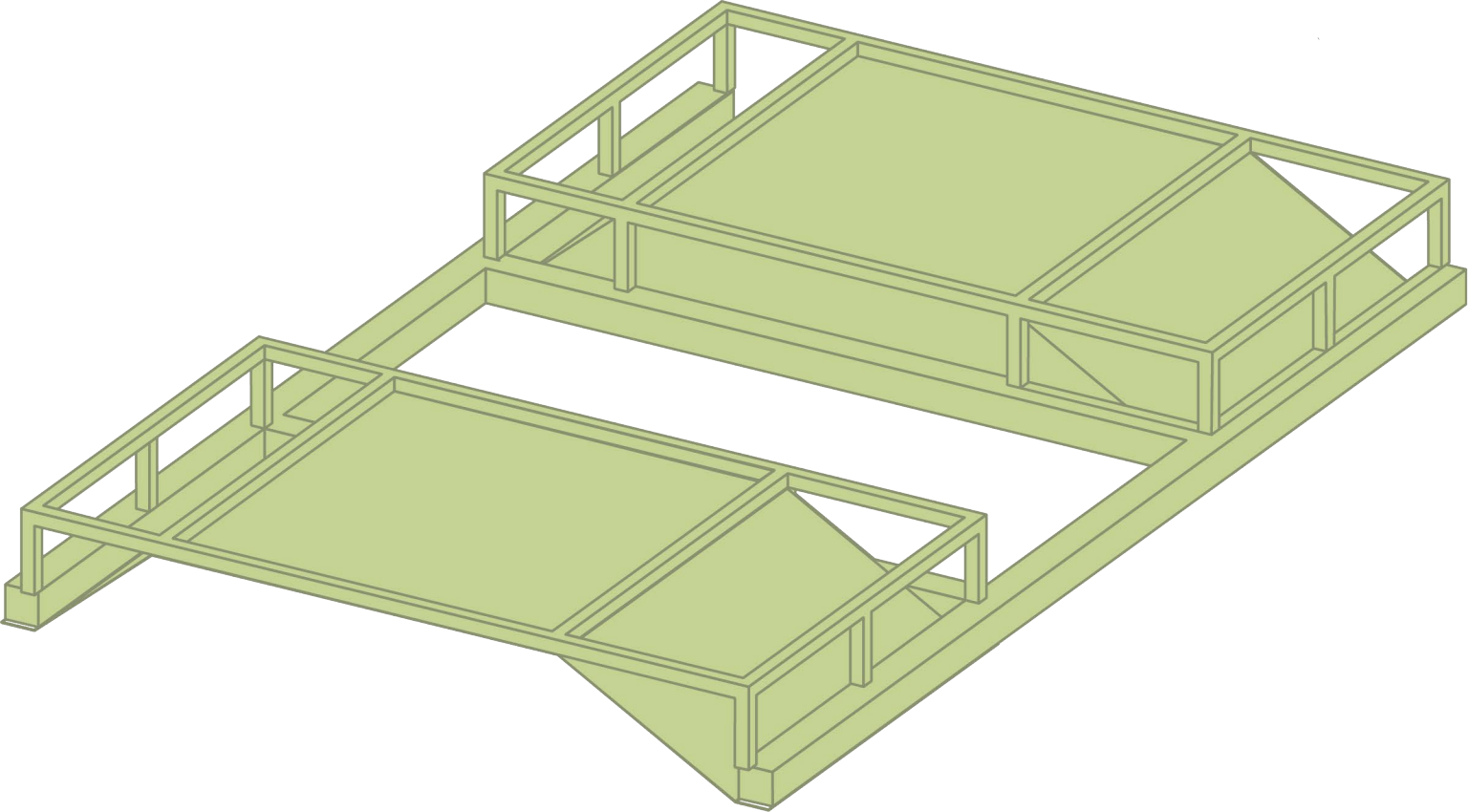

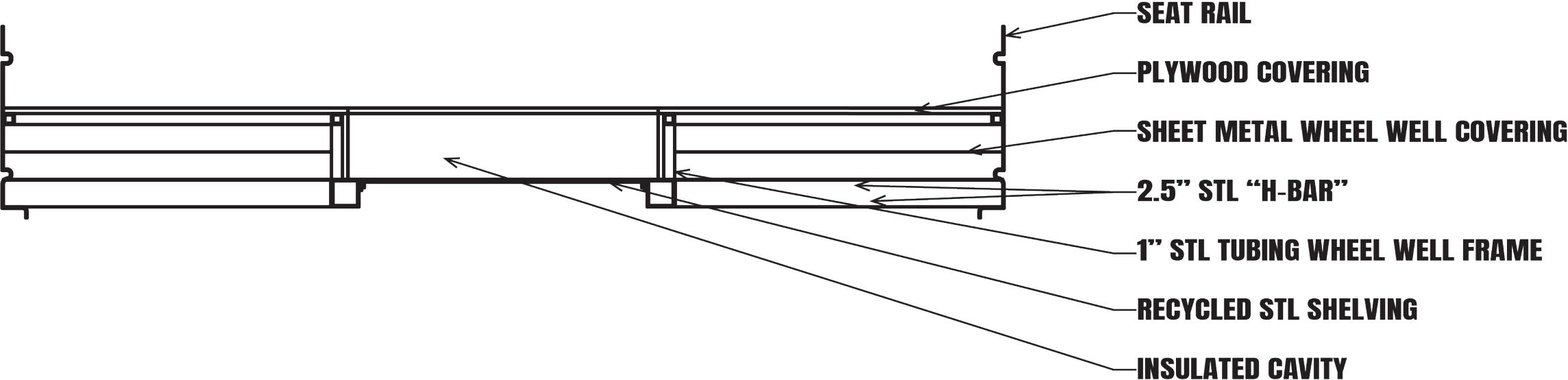
SEAT RAIL
PLYWOOD COVERING
SHEET METAL WHEEL WELL COVERING
2.5” STL “H-BAR”
1” STL TUBING WHEEL WELL FRAME
RECYCLED STL SHELVING
INSULATED CAVITY

10’-6”
FRONT DOOR
ELECTRICAL
CLOSET
LIVING ROOM
KITCHEN
FRIDGE
PANTRY
CLOSET
DESK
BATHROOM
TOILETRY CABINET
BED
24’-6”
7’-6”

3800

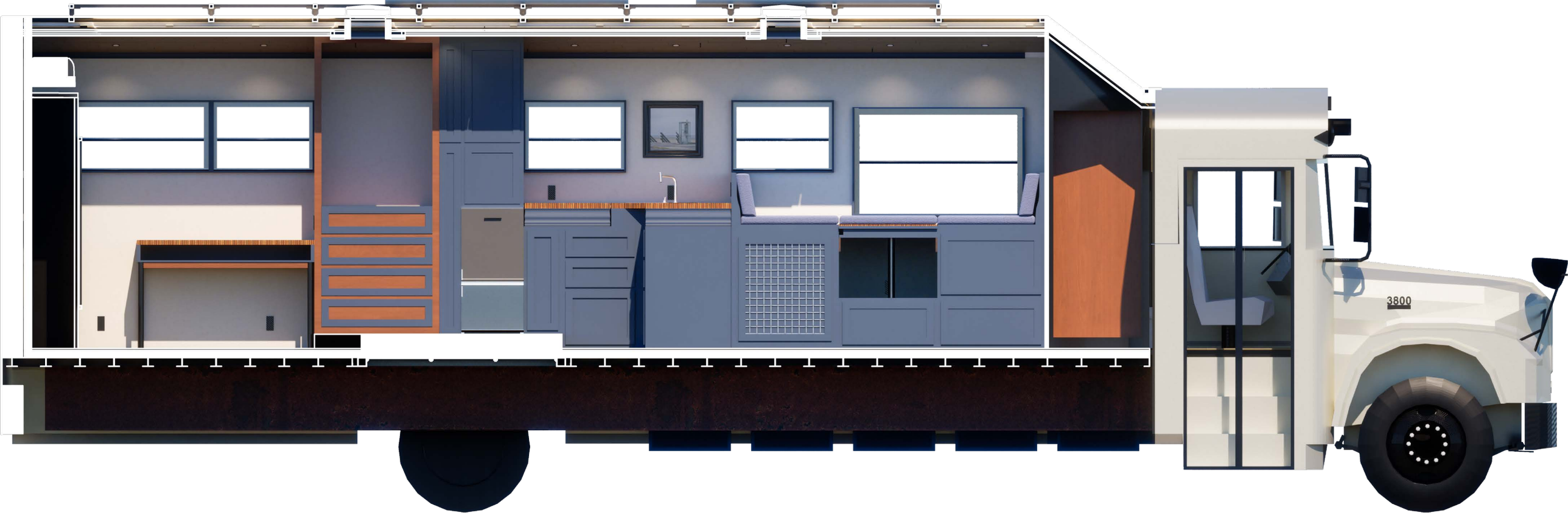
3800

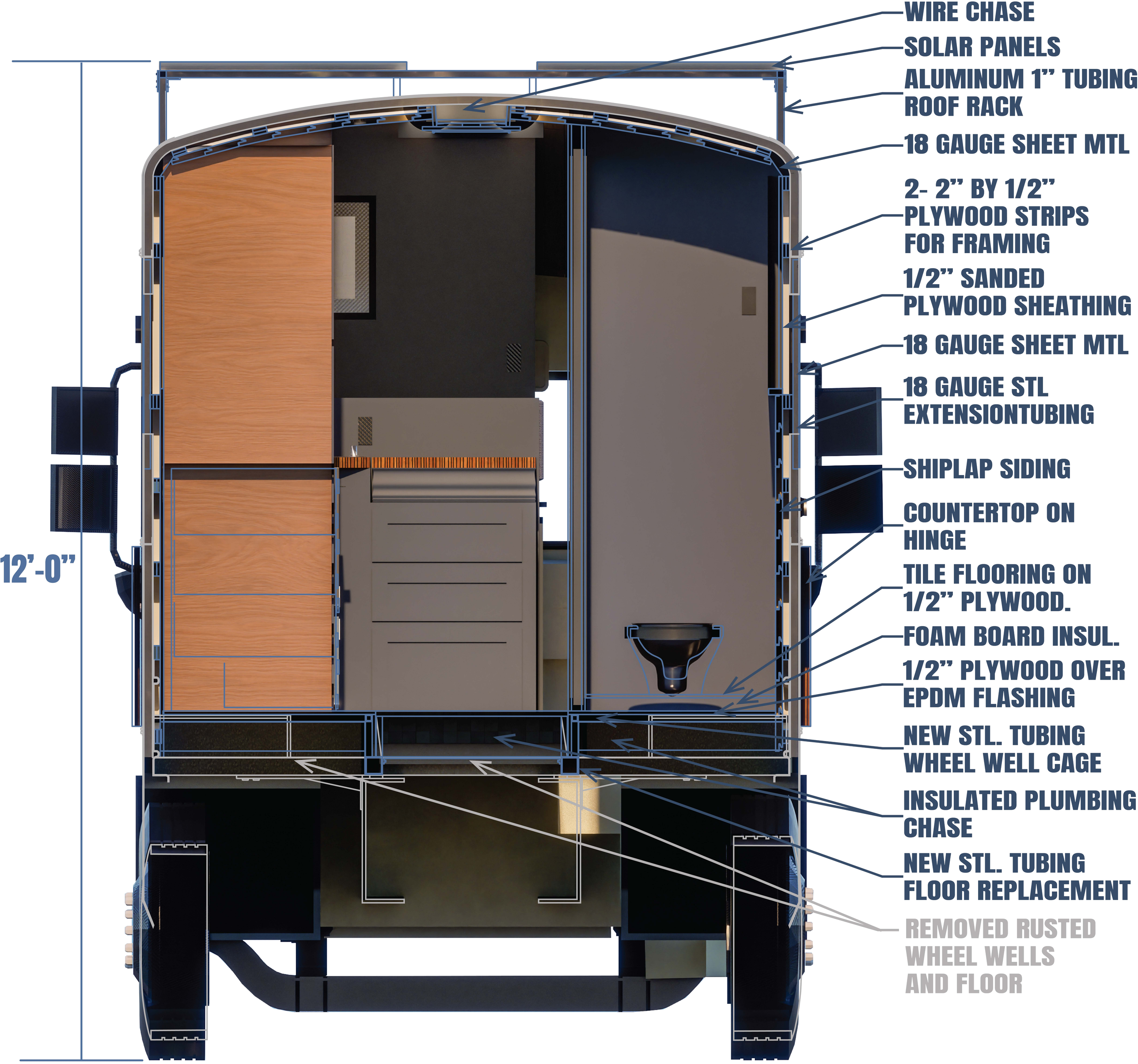
12’-0”
WIRE CHASE
SOLAR PANELS
ALUMINUM 1” TUBING ROOF RACK
18 GAUGE SHEET MTL
2- 2” BY 1/2” PLYWOOD STRIPS FOR FRAMING
1/2” SANDED PLYWOOD SHEATHING
18 GAUGE SHEET MTL
18 GAUGE STL EXTENSIONTUBING
SHIPLAP SIDING
COUNTERTOP ON HINGE
TILE FLOORING ON 1/2” PLYWOOD.
FOAM BOARD INSUL.
1/2” PLYWOOD OVER EPDM FLASHING
NEW STL. TUBING WHEEL WELL CAGE
INSULATED PLUMBING CHASE
NEW STL. TUBING FLOOR REPLACEMENT
REMOVED RUSTED WHEEL WELLS AND FLOOR

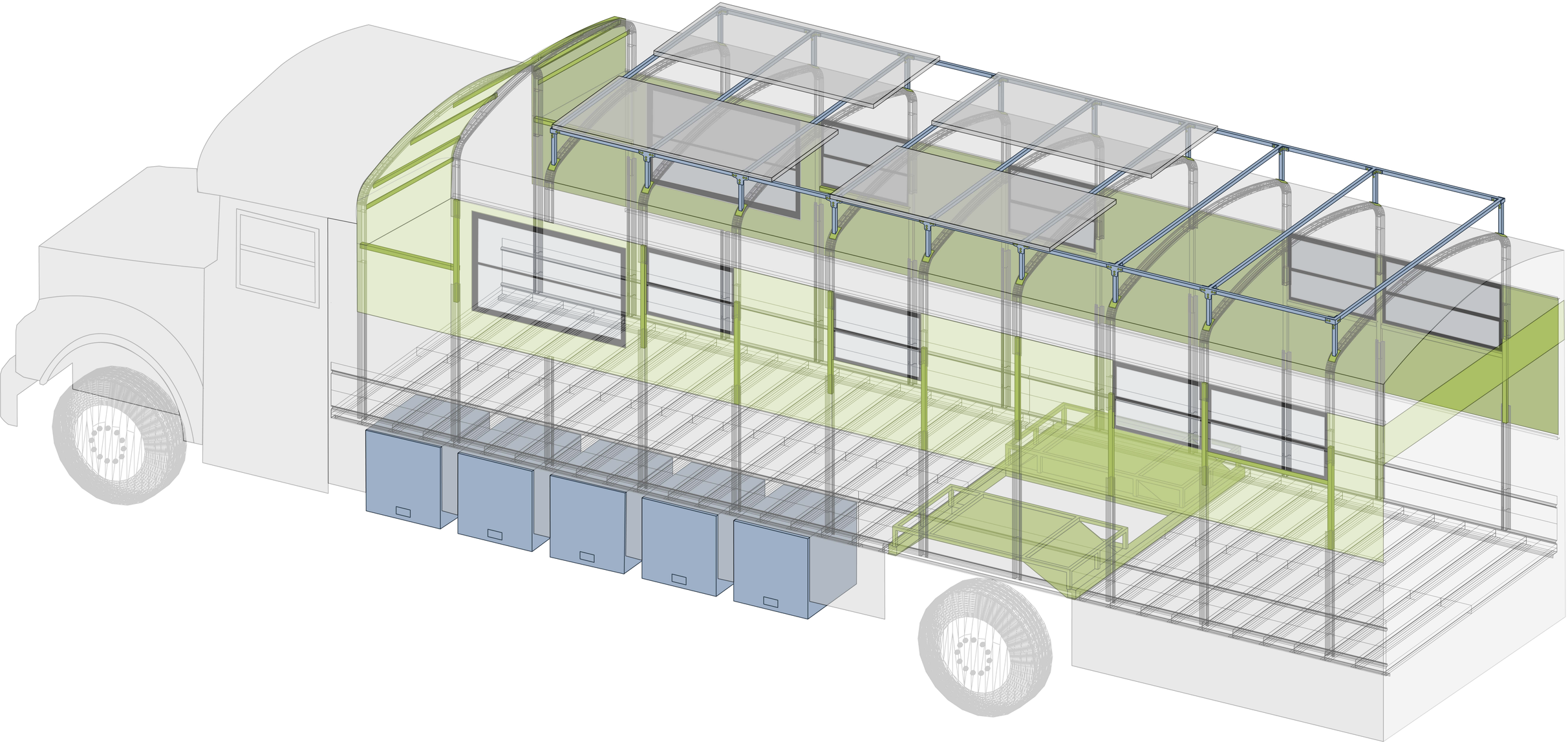

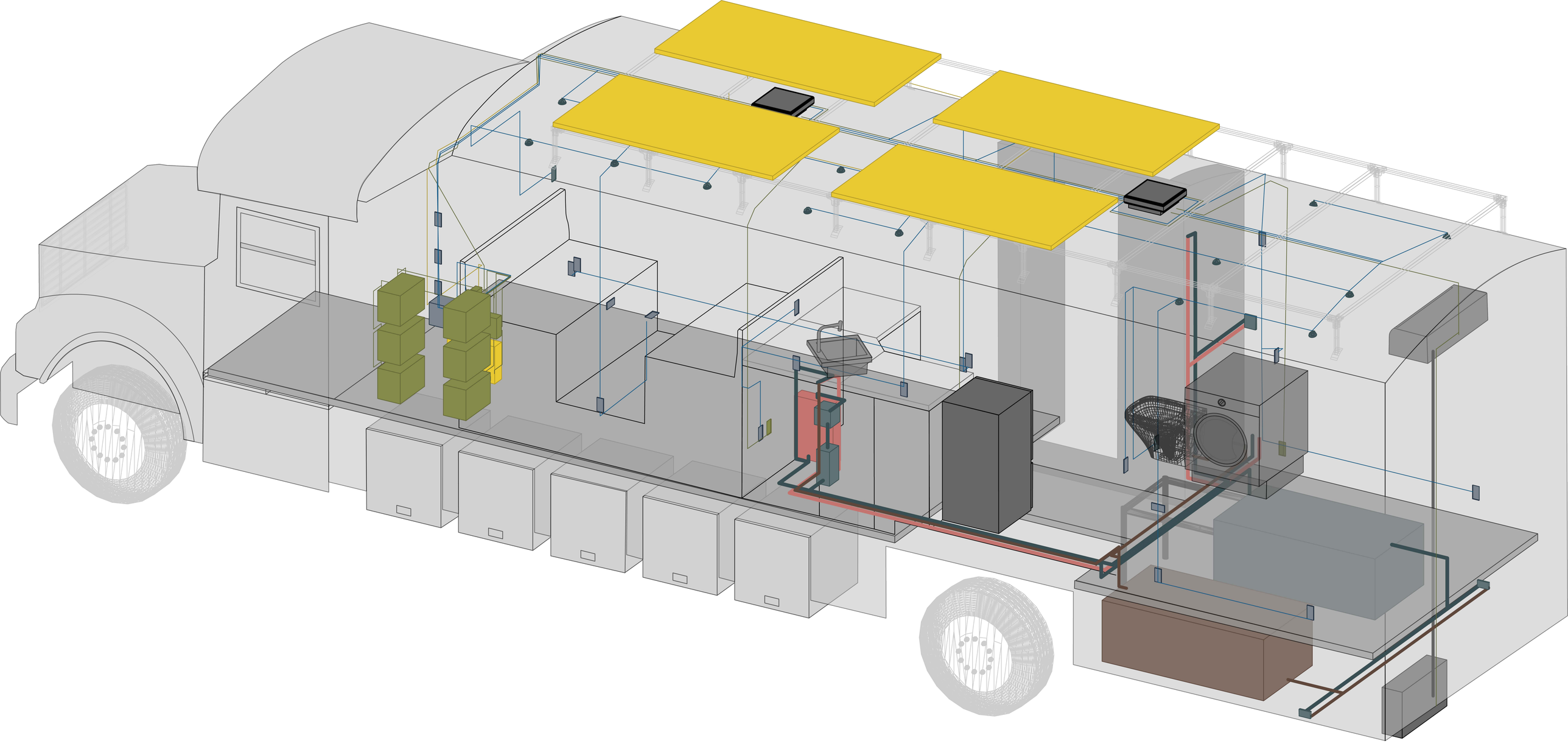
SOLAR
12V ELECTRICAL
120V ELECTRICAL
APPLIANCES
HOT WATER
COLD WATER
GRAY WATER

NATIONAL PARK
STATE PARK
NATIONAL FOREST